Degassed Cation Conductivity Measurement

Author: Lars Gjedde
Date: 12 March 2015
Event: SIAPWS Ordinary General Meeting 2015 in Helsingborg, Filbornaverket

C.K. Environment A/S

SWAN distributor since 1994

Market area Scandinavia

Analyzers, systems and service

C.K.E.

MEASURING & ANALYZING GASES, FLUIDS, HUMIDITY & TEMPERATURE

swan ANALYTICAL INSTRUMENTS

Topics

Sampling Points/ Guidelines

Analytical Method and Principle

Critical Issues

Quality Assurance

Topics

Sampling Points/ Guidelines

Analytical Method and Principle

Critical Issues

Quality Assurance

Conductivity – where is it measured online?

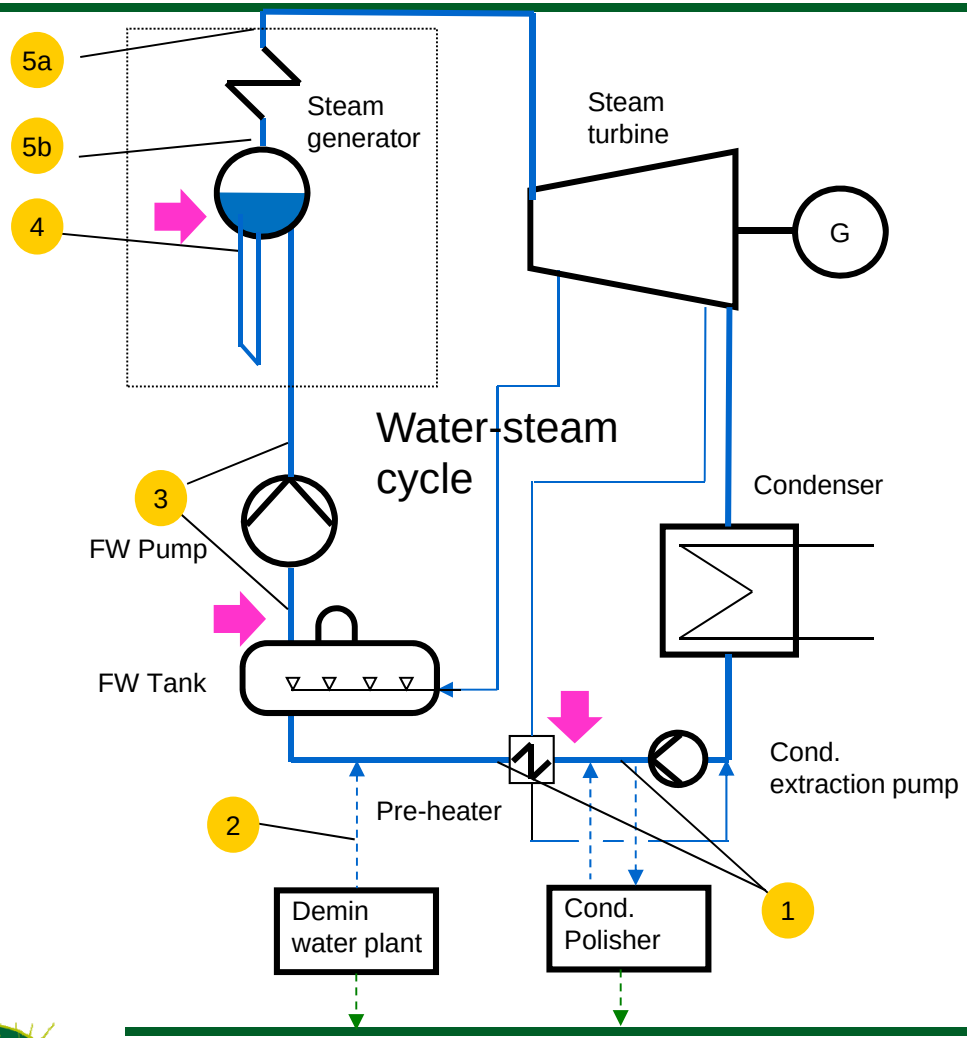

Legend

1	Condensate	SC,AC,DC
2	Demin water	SC
3	Feedwater	SC,AC
4	Boiler water	SC, (AC)
5	Steam	SC,AC,DC

Typical dosing point

SC = specific conductivity
AC = Acid conductivity
DC = Degassed (acid) conductivity

Recommendations of Current Guidelines for Degassed Cation Conductivity

	EPRI	VGB	IAPWS
Degassed Cation Conductivity (DCC)	**Online Monitoring** - Main Steam/ Reheat Steam - Boiler Blowdown - Economizer Inlet - Condensate Polisher Outlet - Condensate Pump Discharge	**Optional Online:** - HP Live Steam **Occasional:** - Condensate Pump Discharge - HP Economizer Inlet	**Optional Online:** - Saturate Steam - Condensate Pump Discharge

Topics

Sampling Points/ Guidelines

Analytical Method and Principle

Critical Issues

Quality Assurance

Conductivity and Cation Conductivity

What's the Idea?

Specific conductivity: Sum of all ions in the sample, like
$NH4^+$, Na^+, Cl^-, CO_3^{2-}, H^+, OH^-, formic acid, etc.
the main contribution comes from the alkalizing reagent, impurities are masked!

Cation conductivity: Hydrogen and sum of all anions in the sample, like
Cl^-, **CO_3^{2-}**, OH^-, formic acid, etc.

But how much of the cation conductivity comes from the "harmless" carbon dioxide or carbonic acid (H_2CO_3)???

What is Degassed Cation Conductivity?

Increase in Cation conductivity reflects contamination or carbon dioxide from air or organic sources.

Degased cation conductivity:

Removal of the CO_2 enables to see only the conductivity contribution from harmful contaminants.

C.K.E.

swan ANALYTICAL INSTRUMENTS

Carbon Dioxide vs. Conductivity

Carbon Dioxide Affect Conductivity Measurement!

50ppb CO_2 in 25°C
Conductivity: approx. 0.18uS/cm

10ppb CO_2 in 25°C
Conductivity: approx. 0.08uS/cm

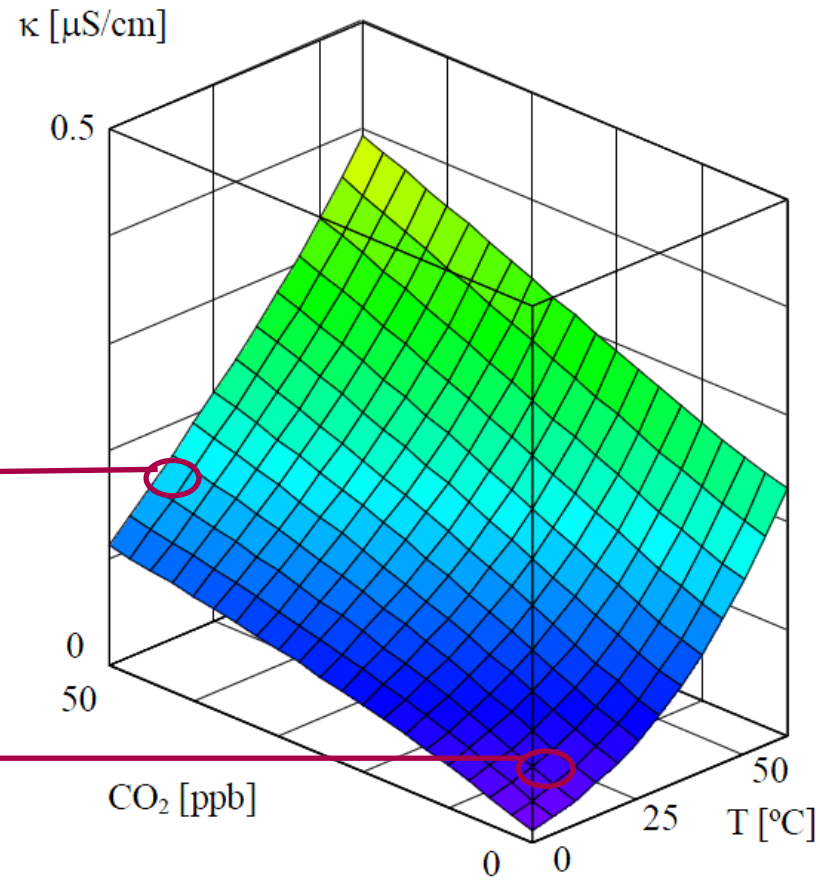

Graph: Conductivity from 0-50ppb CO_2; 0-60°C.
(1ppb CO2 ~2.27 x 10^{-8} Mole/L)

Common Degassing Methods

Degassing Method	Control Parameters
Mechanical rotating disc & stripping gas	- Rotating disc speed - Stripping gas flow rate - Sample flow - Sample temperature
Membrane exchanger with vacuum & stripping gas	- Vacuum level - Stripping gas flow - Sample flow - Sample temperature
Re-boiling (ASTM D4519-10; Larson Lane Re-boiler)	- Sampling boiling point

Degassed Acid Conductivity & Calculate-pH

Monitor AMI Deltacon DG

Application:
Steam & Condensate

- According to ASTM D4519-10 Larson Lane reboiler recommendation.
- For specific conductivity, acid conductivity and degassed conductivity after sample reboiler.
- Calculation of sample pH and alkalization concentration by differential conductivity.
- Automatic determination of correct boiling point
- Selectable & unique temperature compensation curves for all common alkalizing agents.
- Monitoring of exhaust of resin and sample flow control.

Degassed (DAC) Conductivity & pH

Sample flow scheme

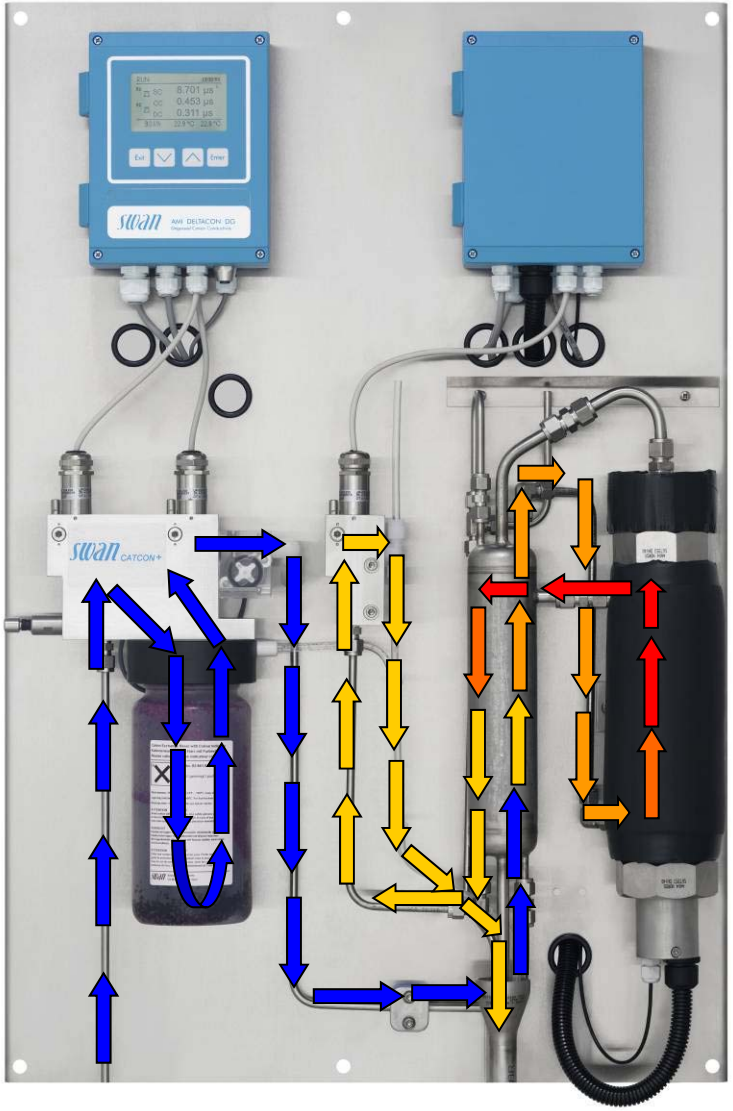

Topics

Sampling Points/ Guidelines

Analytical Method and Principle

Critical Issues

Quality Assurance

What Happen If…

Cation resin exchanger is exhausted without notice?

Air is in the cation exchanger?

No flow but boiler continue to heat?

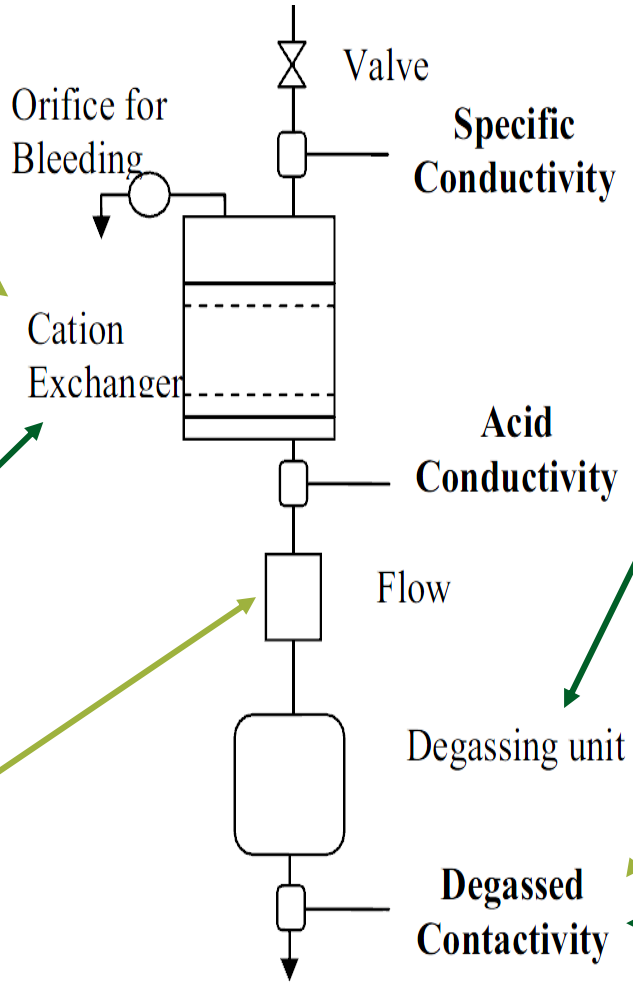

Boiling point is changing due to change of air pressure?

Bubble formation at the sensor due to hot sample?

Accurate temperature compensation?

Critical Issue 1: Boiling Point Determination

Why is the boiling point important?

- If the boiling point is too low not all CO_2 is degassed from the sample
- If the boiling point is too high the sample is concentrated
- When the air pressure changes; the boiling point changes too
- A degassed cation conductivity monitor must determine and adjust the boiling point frequently

C.K.E.

swan ANALYTICAL INSTRUMENTS

Control Of Degassing Temperature

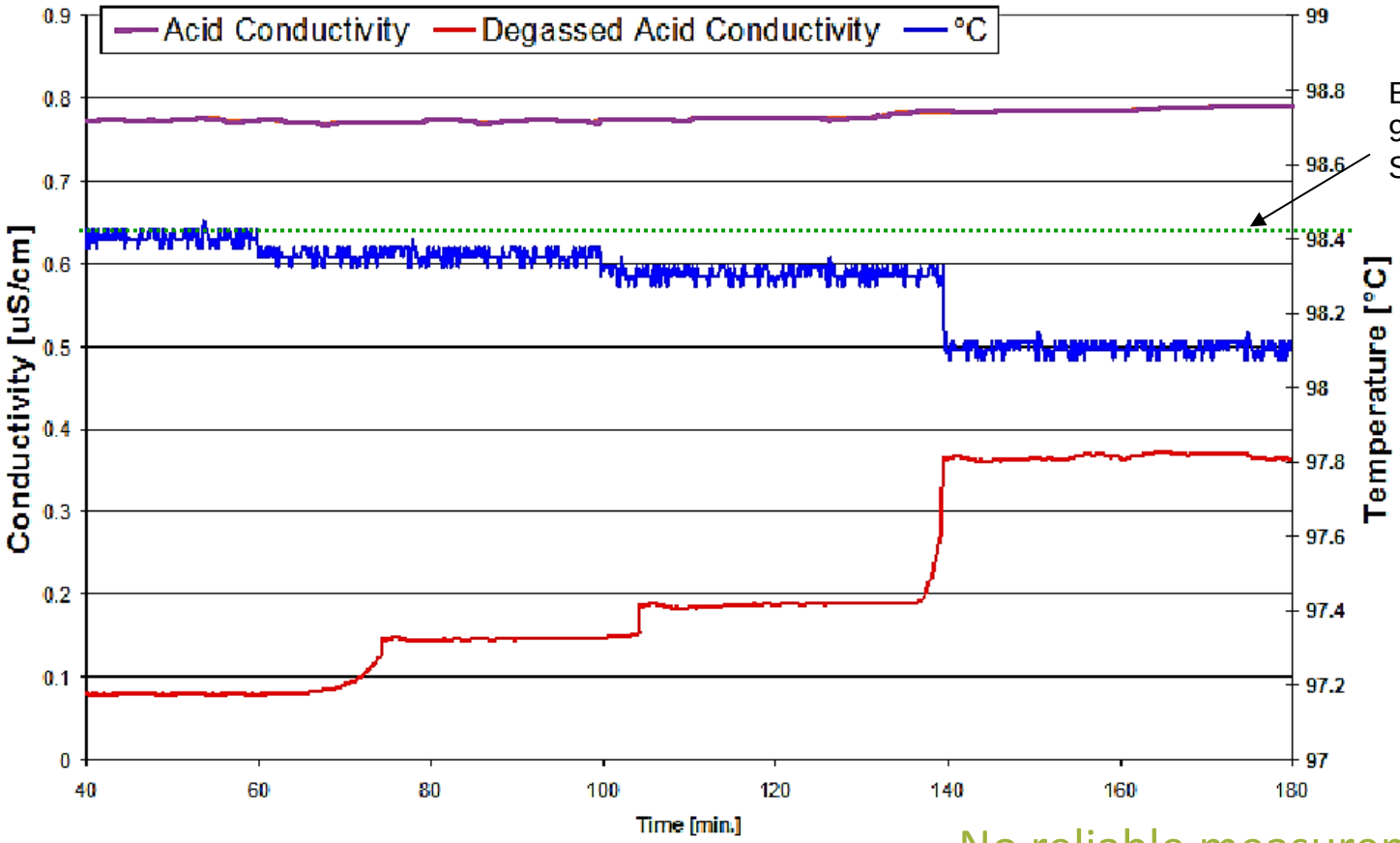

Boiling Point at 957 hPa:
98.42 °C
Sample flow 7 l/h

No reliable measurement without tight control of the boiling point!

Critical Issue 2: Temperature Compensation

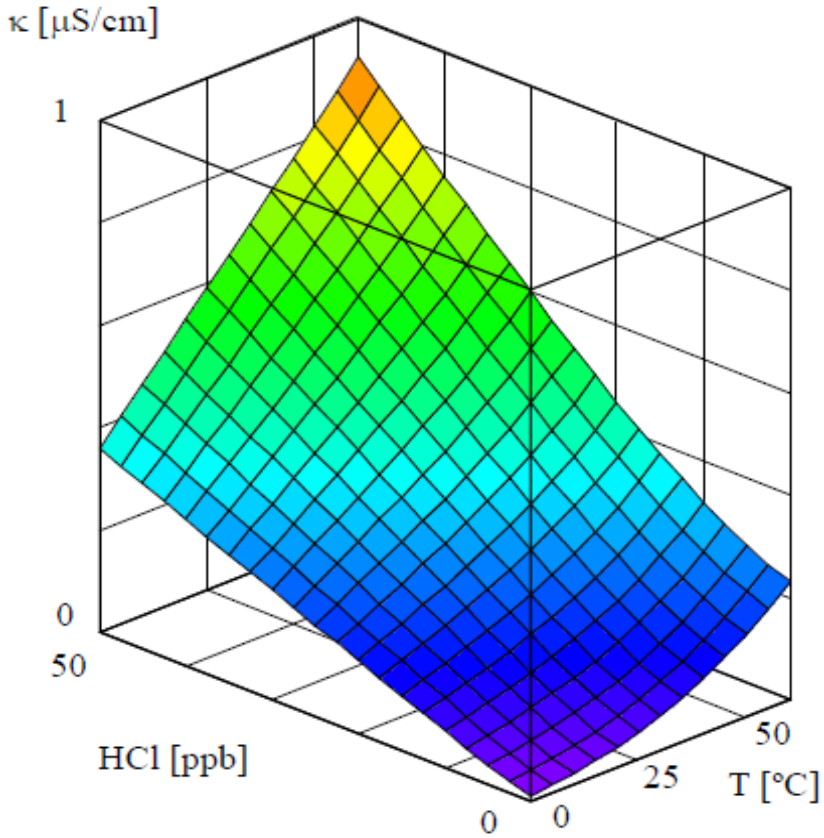

Graph: Conductivity from 0-50ppb HCl; temperature, 0- 60°C.
(1ppb HCl ~2.74 x 10^{-8} Mole/L)

It is not an absolute need to cool down the sample temperature at 25°C for degassed cation conductivity measurement.

Topics

Sampling Points/ Guidelines

Analytical Method and Principle

Critical Issues

Quality Assurance

Quality Assurance

- Modern electronics have virtually no drift.
- Metals used for sensing are inert and the cell constant can only be altered by mechanical damage or coating.
- Calibration is not common for conductivity sensors. Sensors should be cleaned from time to time to remove coatings.
- **Quality Assurance**

  High purity water will immediately pick up CO_2 when exposed to air. Therefore, low conductivity standards are not recommended for an QA-check (see ASTM D5391-99)

  Correct quality assurance is done with a portable instrument that can be connected on-line.

C.K.E.

swan ANALYTICAL INSTRUMENTS

Maintenance Schedule (Example)

Monthly	- **Check sample flow.** - **Check the cation conductivity resin. Replace if necessary.** - **If the sensor is contaminated, clean it with soapy water and a pipe cleaner. If necessary, dip the tip of the sensor into 5% hydrochloric acid for approx. 30 second.** - **Verify the monitor with portable instrument that can be connected on-line.**

C.K.E.

swan ANALYTICAL INSTRUMENTS

Question?

C.K.E.

swan
ANALYTICAL INSTRUMENTS

Thank you for your attention

C.K.E.

swan
ANALYTICAL INSTRUMENTS