Analyses phase: 140 MW_{Th} wood chips/straw fired boiler – 35-100 % steam export

SIAPWS meeting, Nordjyllandsværket, 10. marts, 2016.

Jørgen Peter Jensen

DONG energy

Replace excisting coal dust fired boiler (ASV2) without SCR – limited lifetime 17.500 from 2016 (IED) (1.1.2019)

ASV2: 370 MJ/s
NOx emission limit: 500 mg/Nm3
Max. η_{Total} = 85 %
Annual total efficiency 60 %

ASV6: 140 MJ/s
Max. η_{Total} = 107 %
Annual total efficiency 101 %

Demin water production at Asnæs Power Plant

Surface water from Tis Lake

↓

Flocculation with $FeCl_3$ and polymer

↓

Sand filtration

↓

Scavenger

↓

CAT-ion Exchanger

↓

CO_2 degasser

↓

AN-ion Exchanger

↓

Mix-Bed

↓

Ultra pure water
Conductivity < 0,1 µS/cm
DOC ≈ 450 ppb

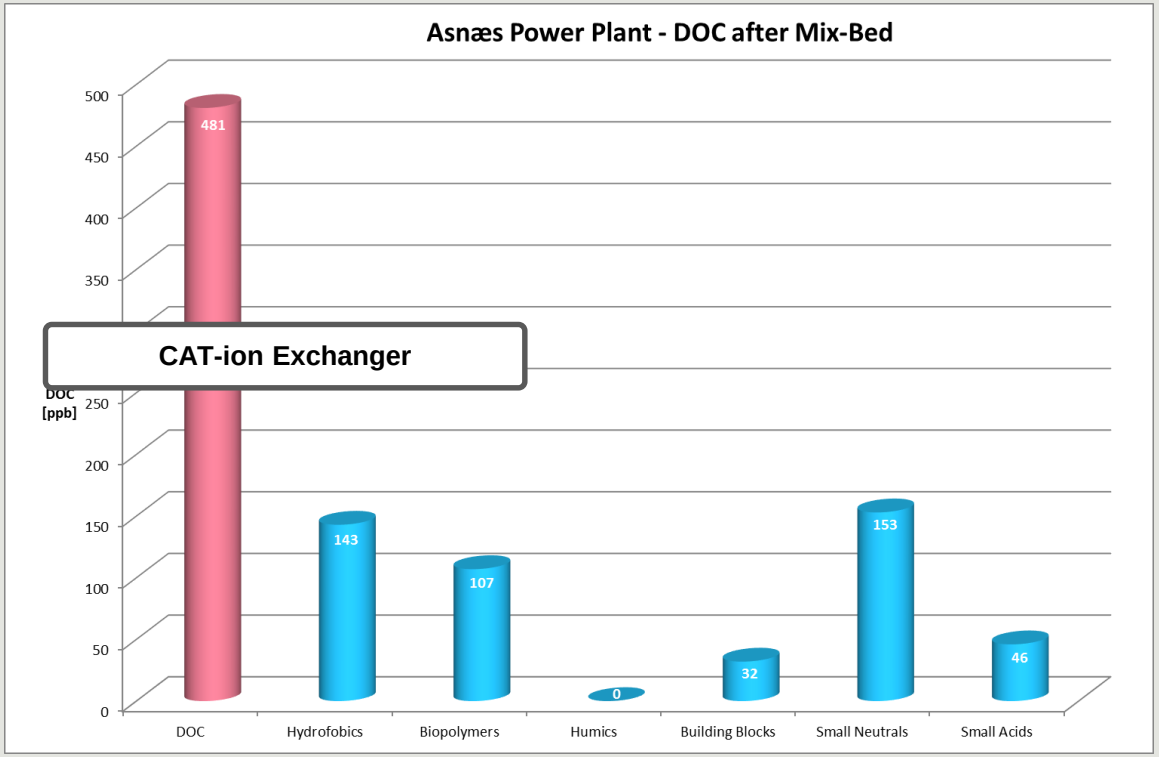

DOC = Dissolved Organic Carbon

MionTec Data	Total DOC	Hydrofobics	Biopolymers	Humics	Building Blocks	Small Neutrals	Small Acids	Sum of Hydrophilic
	µg/l	µg/l	µg/l	µg/l	µg/l	µg/l	µg/l	µg/l
Raw water	11146	1192	466	6593	1226	1600	69	9954
after flocculation	5036	528	205	2125	1148	1018	12	4508
after scavenger	2206	207	216	573	681	528	0	1998
after SBA	438	162	106	0	26	110	34	276
after MB	481	143	107	0	32	153	46	338

ASV2 excisting coal dust fired boiler (ASV2) without SCR – limited lifetime 17.500 from 2016 (IED) (1.1.2019)

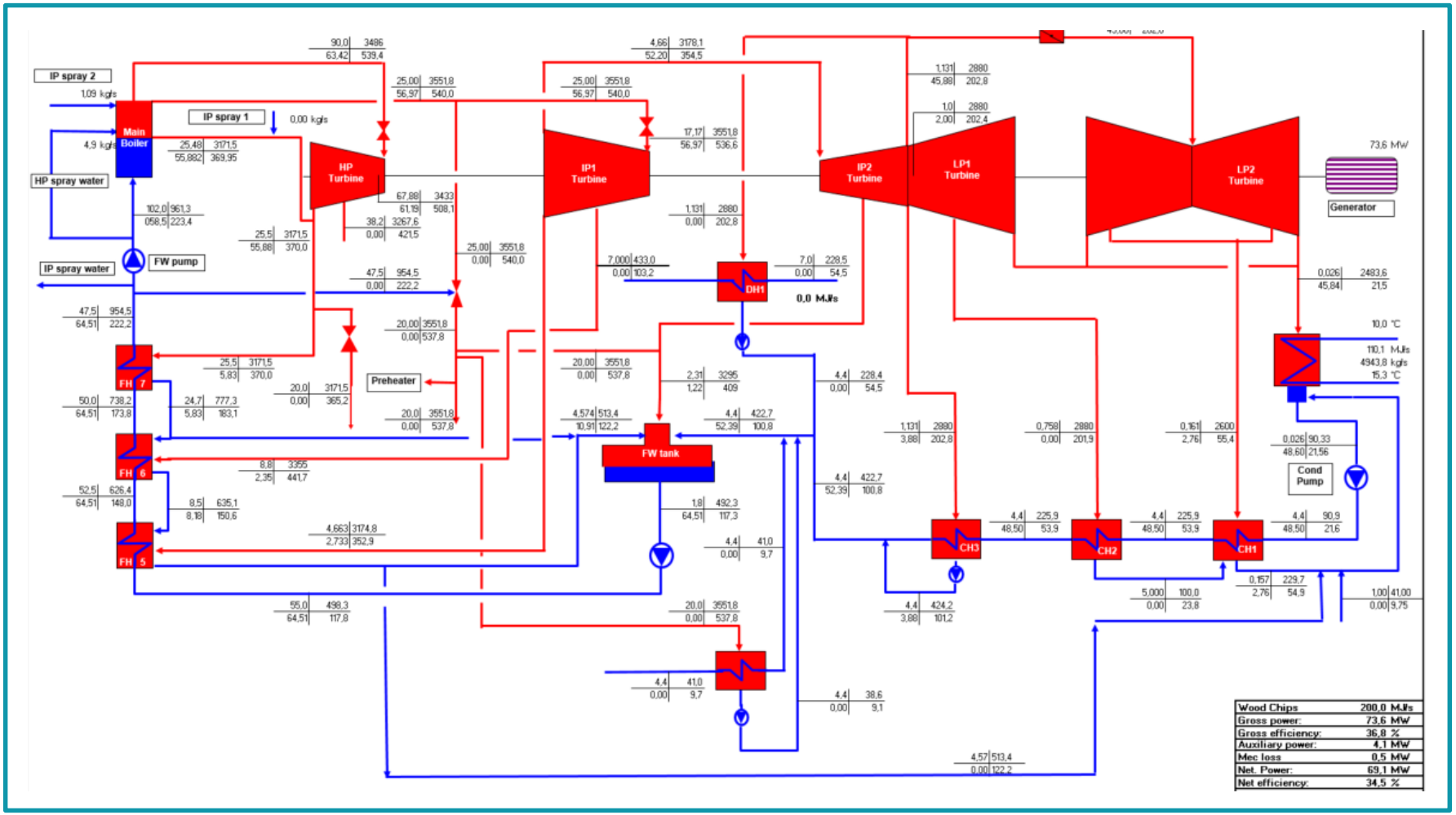

DONG energy

ASV2
Acid conductivity and steam flow

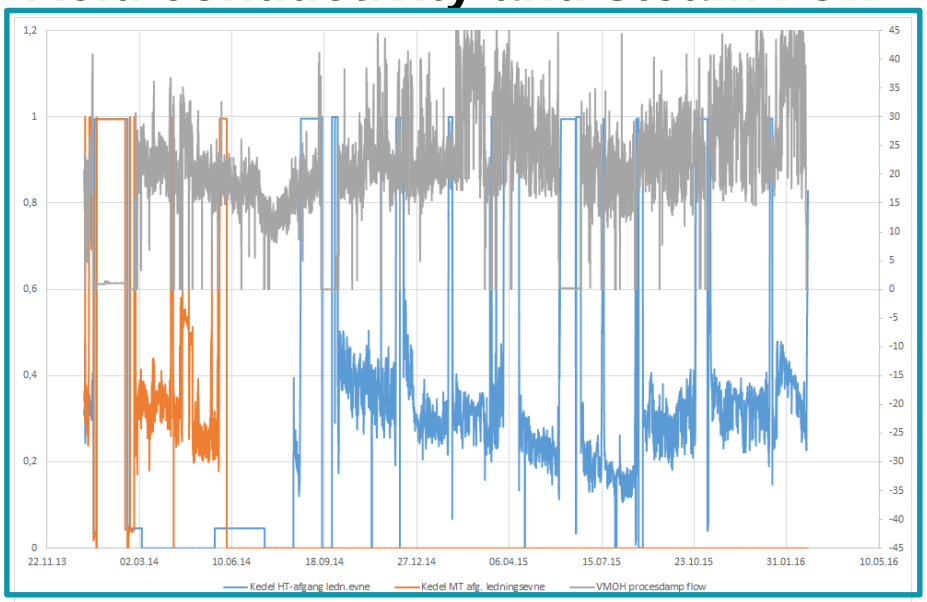

	Acid Conductivity	Calculated Acid Conductivity	Acetate	Formate	Chloride	Sulfate
	µS/cm	µS/cm	µg/kg	µg/kg	µg/kg	µg/kg
Makeup water			11	<3	5,2	<1
Condensate			34	8,3	6,9	<1
Feed water	0,14		29	10	5,2	<1
Boiler water	3,17		43	9,9	26	4
HP steam	0,43		56	10	<1	<1
IP steam	0,45		57	9,7	<1	<1

Water chemistry
Degradation of organics to acetic and formic acid

Will the concentration of acetic and formic acid increase or decrease?

- Higher boiler temp. ASV2 => higher CO2
- Higher CR in ASV2 => higher CO2
- RH on ASV2 => higher CO2
- Higher fraction of acids recirculated => higher acids PTZ

Higher concentration of acetate and formate at PTZ at ASV6 than ASV2

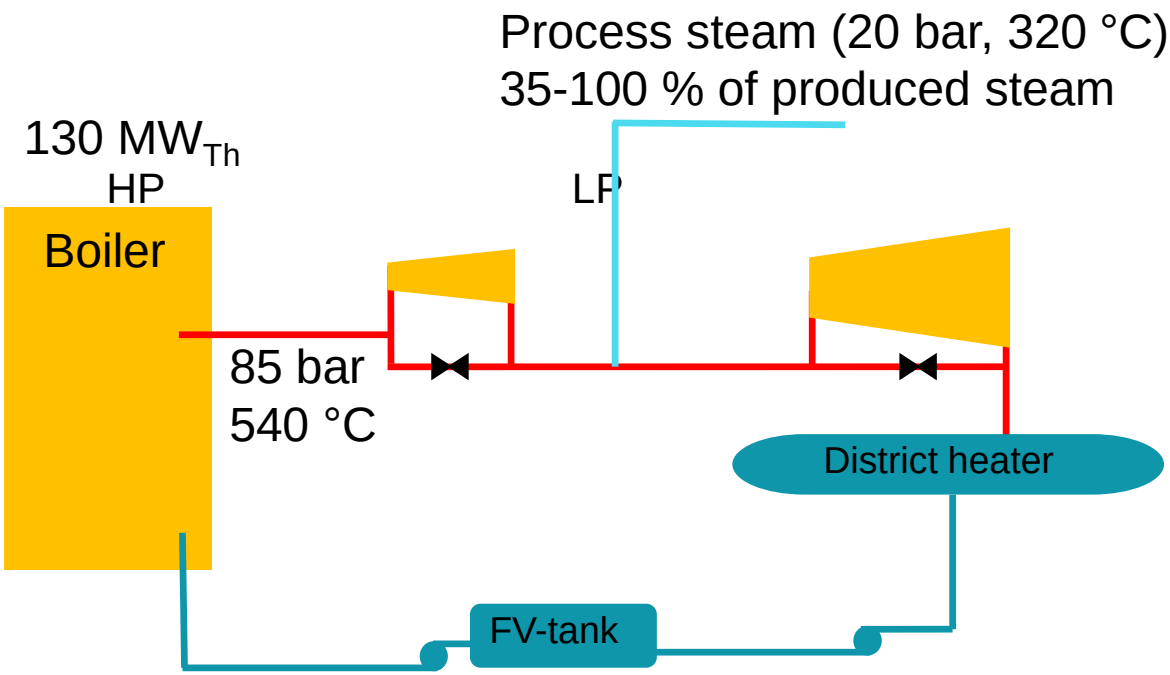

VGB Steam Purity Guideline

			Without additional measurement of degassed, acid conductivity	With additional measurement of degassed, acid conductivity
Acid Conductivity	µS/cm	N	*)	*)
		AL 1	0.20	0.5
		AL 2	0.50	0.8
		AL 3	1	1.3
Degassed, acid conductivity	µS/cm	N	–	*)
		AL 1	–	0.20
		AL 2	–	0.50
		AL 3	–	1

*) Must be evaluated plant-specifically, see Chapter 8

N: Normal Level

AL 1 (2, 3): Action Level

(1) The higher action limits (column "With additional measurement of degassed, acid conductivity") may be applied when the increase in acid conductivity is associated with carbon dioxide, and organic degradation products are excluded as the cause.

AMV3 – LP-turbine (1995)

IAPWS Steam Purity Guideline

Parameter	Unit	Normal / Target Values
Conductivity after cation exchange @ 25 °C	µS/cm	< 0.20

Carbon dioxide is considered non-corrosive to the steam turbine, when its concentration is within reasonable limits (e.g., CACE in steam <0.5 µS/cm)

Organic matter, decomposition products may be acidic and cause low pH conditions at early condensation in the PTZ.

Degassed CACE cannot be compared directly with specification limits for CACE.

Chemical analysis of steam during startup give information for determining whether these values are suitable, or should be tightened or relaxed. Chemical analysis of the steam should include measurement of sodium, anions and cations with IC, CACE, and Degassed CACE if it is available.

Purity of Makeup Water?

VGB – 407 Ge

Demineralized water, deionized water — refers to water having the following quality characteristics in conformity with the relevant VGB recommendations:

Conductivity at 25°C	≤ 0.08	µS/cm
Silicic acid content	≤ 0.010	mg/l
Sodium content	≤ 0.005	mg/l
DOC content	≤ 0,200	mg/l C

VGB – Feed Water, Boiler water and steam quality

To evaluate the possible effects and means for removal of organics, the knowledge of the type of organics is very important /19/. It is recommended to strive for less than 0.1 mg/l. Even this value may be too high in special cases, depending on the nature of the organic matter and the make-up water demand. High make-up rates require a minimization of the DOC content, see VGB-M 407 (3).

Where organic substances can enter the steam water cycle from other sources, e. g. return of non-purified condensate in industrial power plants, continuous monitoring of the DOC content in the condensate or feed water is recommended (see VGB-M 412 (5)).

DONG energy

Purity of Makeup Water?

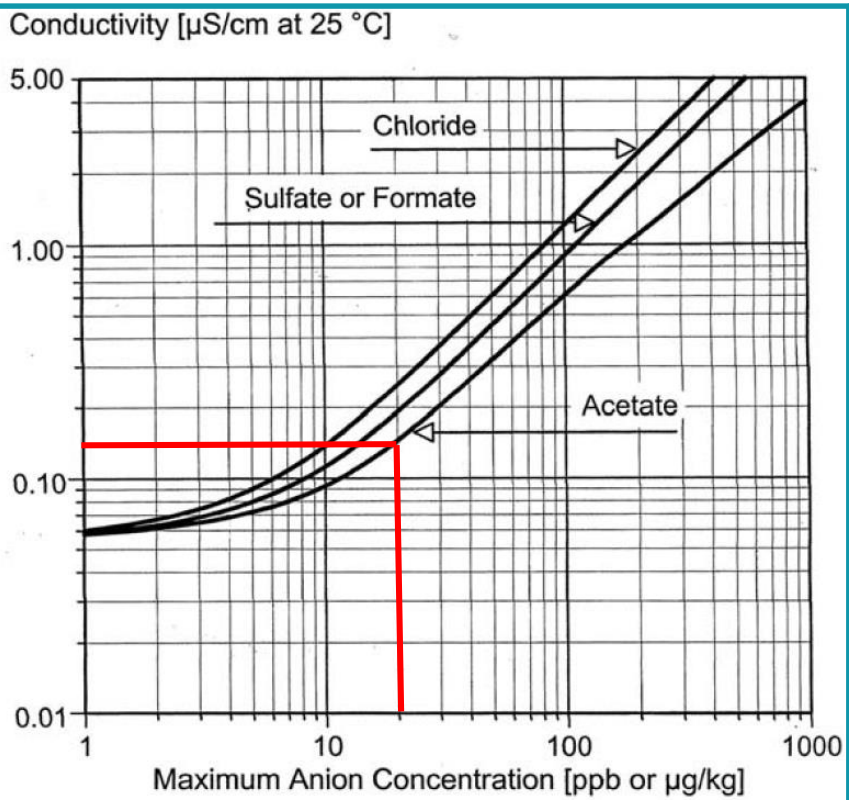

20 ppb Acetate = 4 ppb TOC

D.H. Moed et al. / Applied Thermal Engineering 65 (2014) 194–200

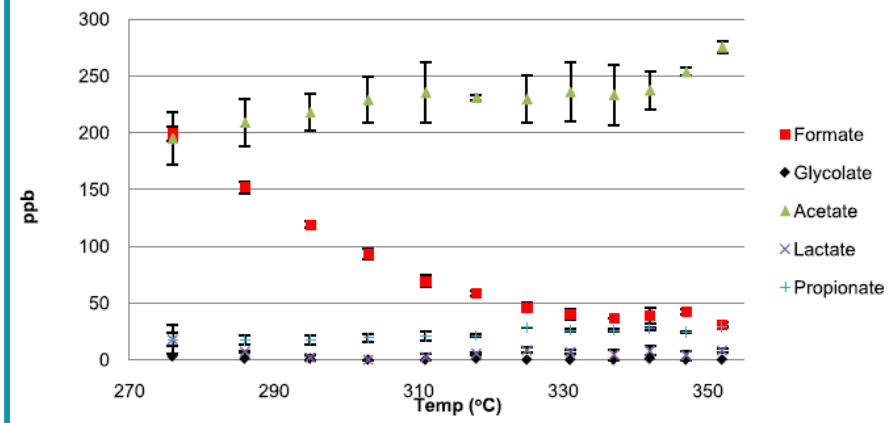

Fig. 3. Organic acid anions formed from feedwater with 2.4 ppm TOC (make-up water concentrate) as a function of temperature in the flow reactor. Conditions: AVT(O), 5 min retention time.

2400 ppb TOC => 240 ppb Acetate

Conclusion: Makeup water TOC< 40 ppb

Schematic Diagram from the Boiler to the Stack

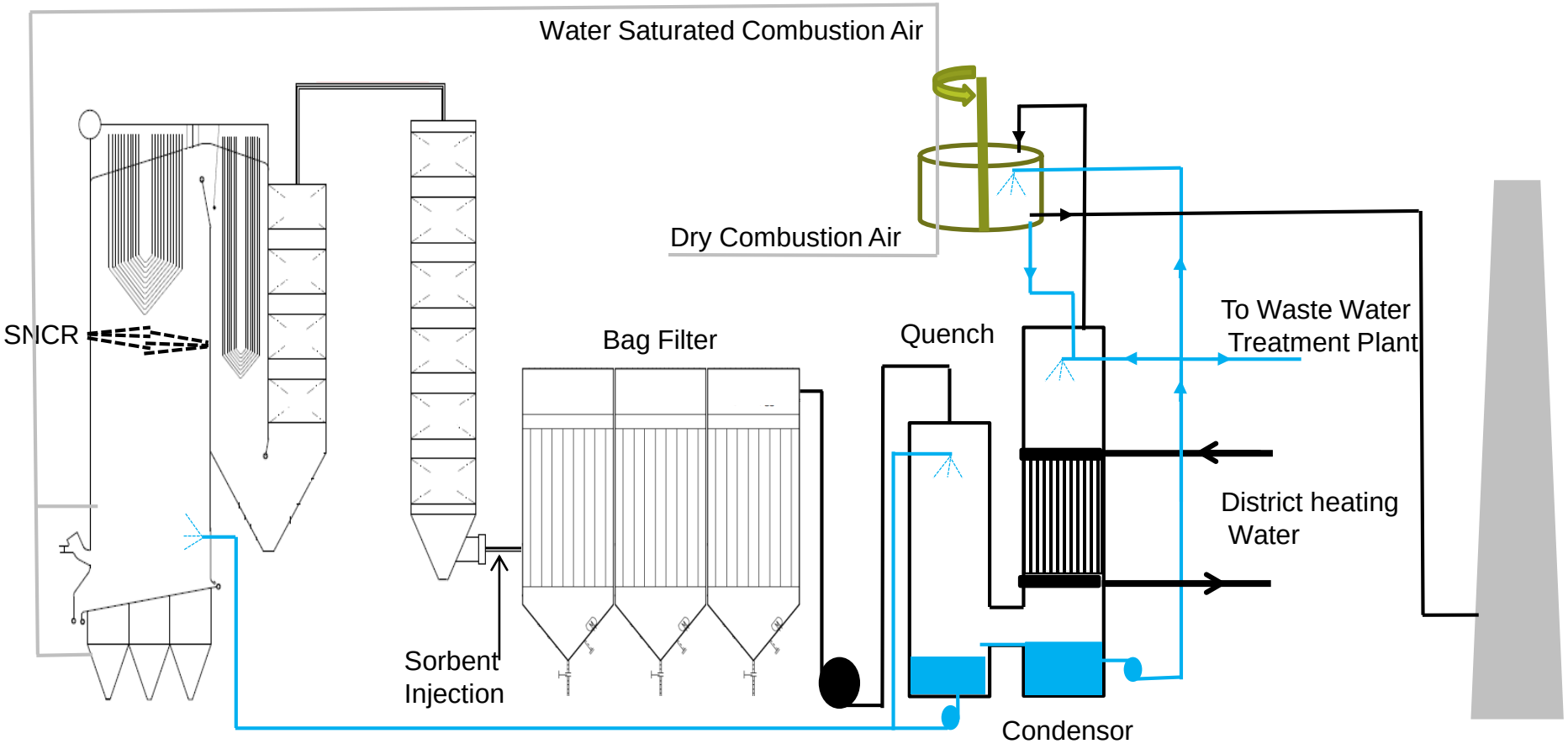

Flue Gas Condensate Treatment Plant

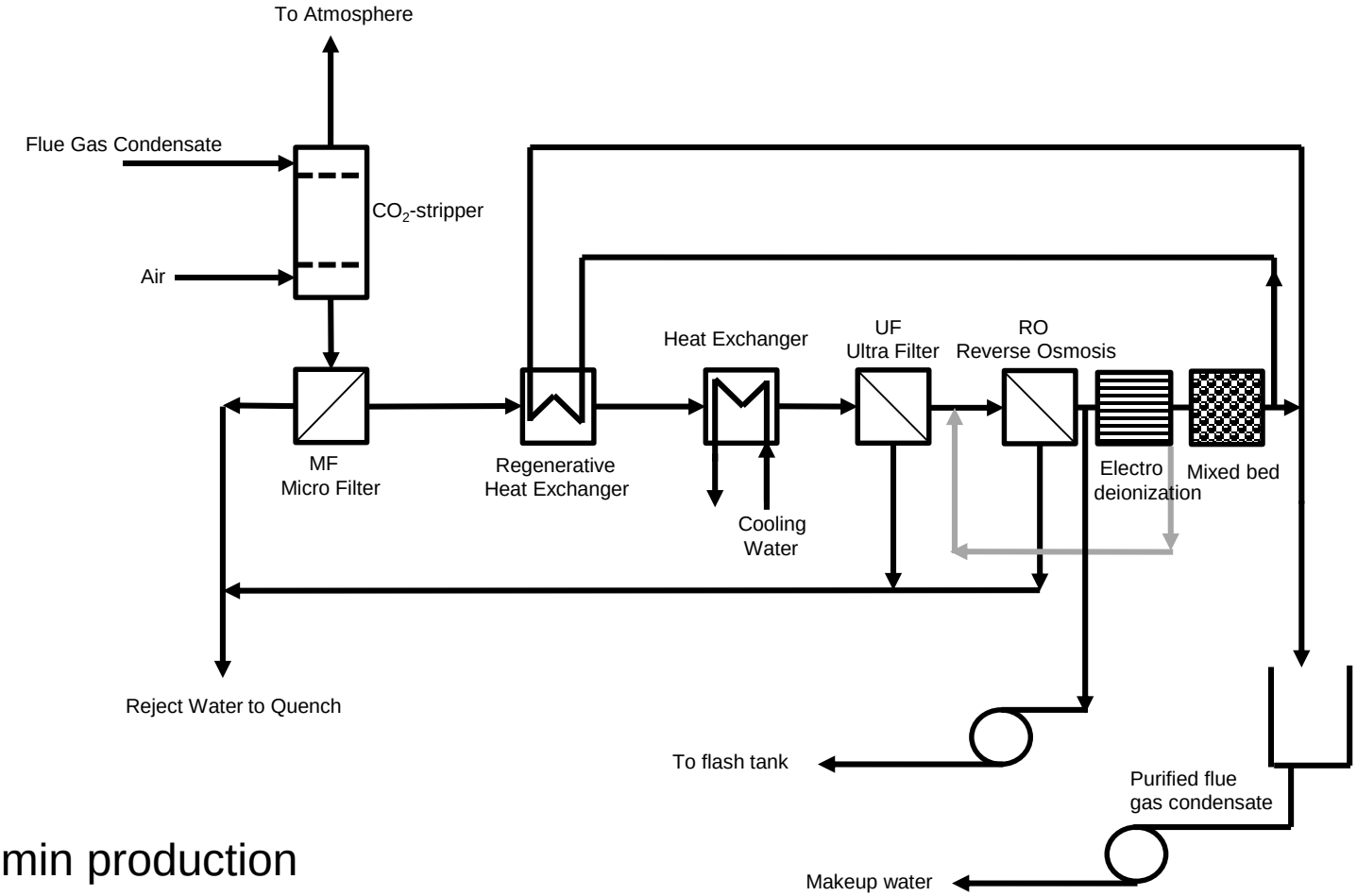

Demin production

Condensate	125.000 m3/year
Old make up plant	455.000 m3/year
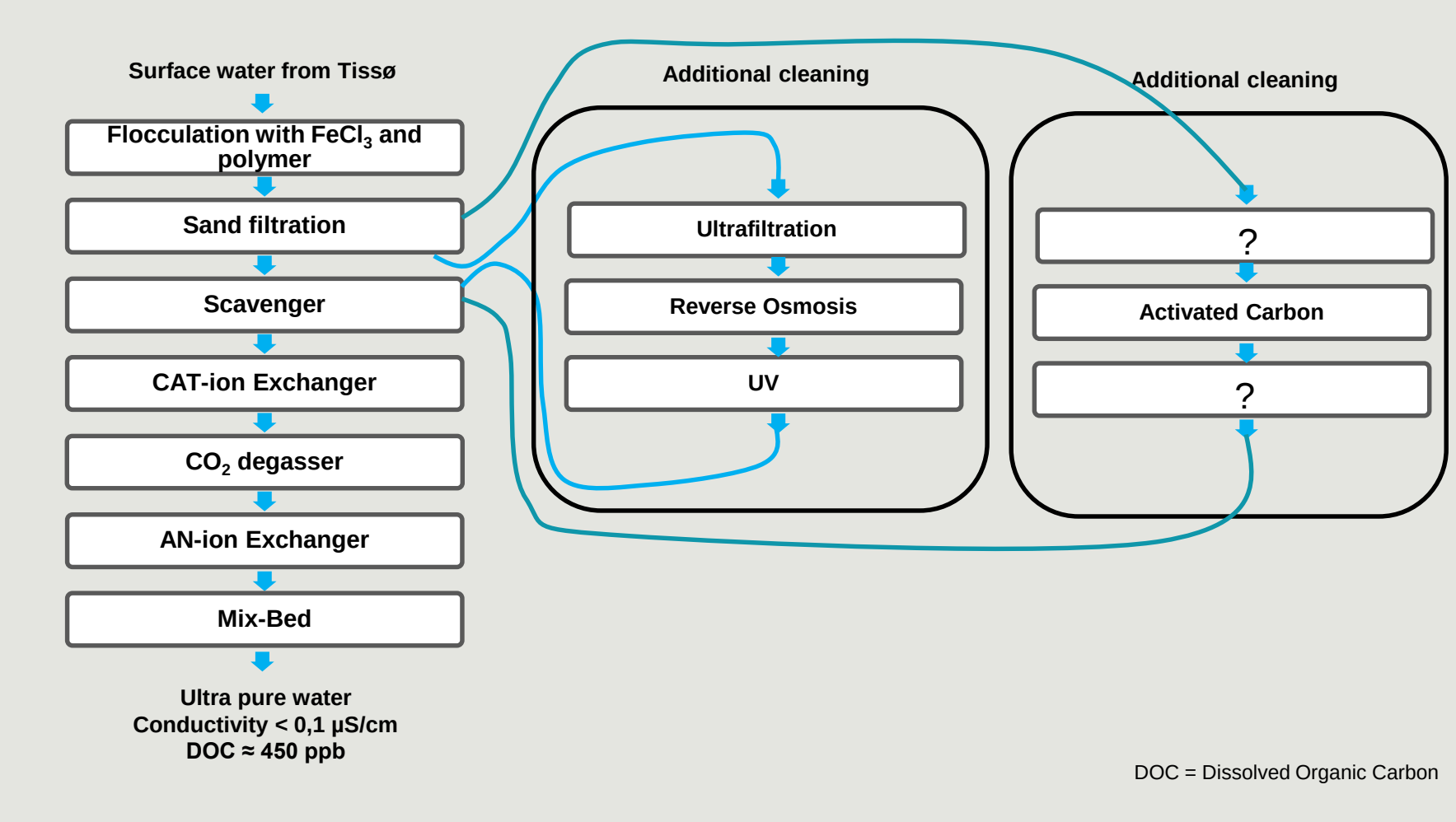
Demin water production at Asnæs Power Plant