Welcome to Nordjyllandsværket A/S

General introduction to unit 3

NORDJYLLANDSVÆRKET

AALBORG ENERGIKONCERN

Presentation

Mr. Jimmy Nielsen

Shiftleader - Marine engineer

Operational department

Plant overview

1. Unit1 – not in operation
2. Unit2 preserved
3. Unit3
4. District heating accumulation tank
5. Oil tanks
6. Workshop & warehouse
7. Admin. Buildings
8. Gas turbine
9. Gypsum storage
10. Coal storage

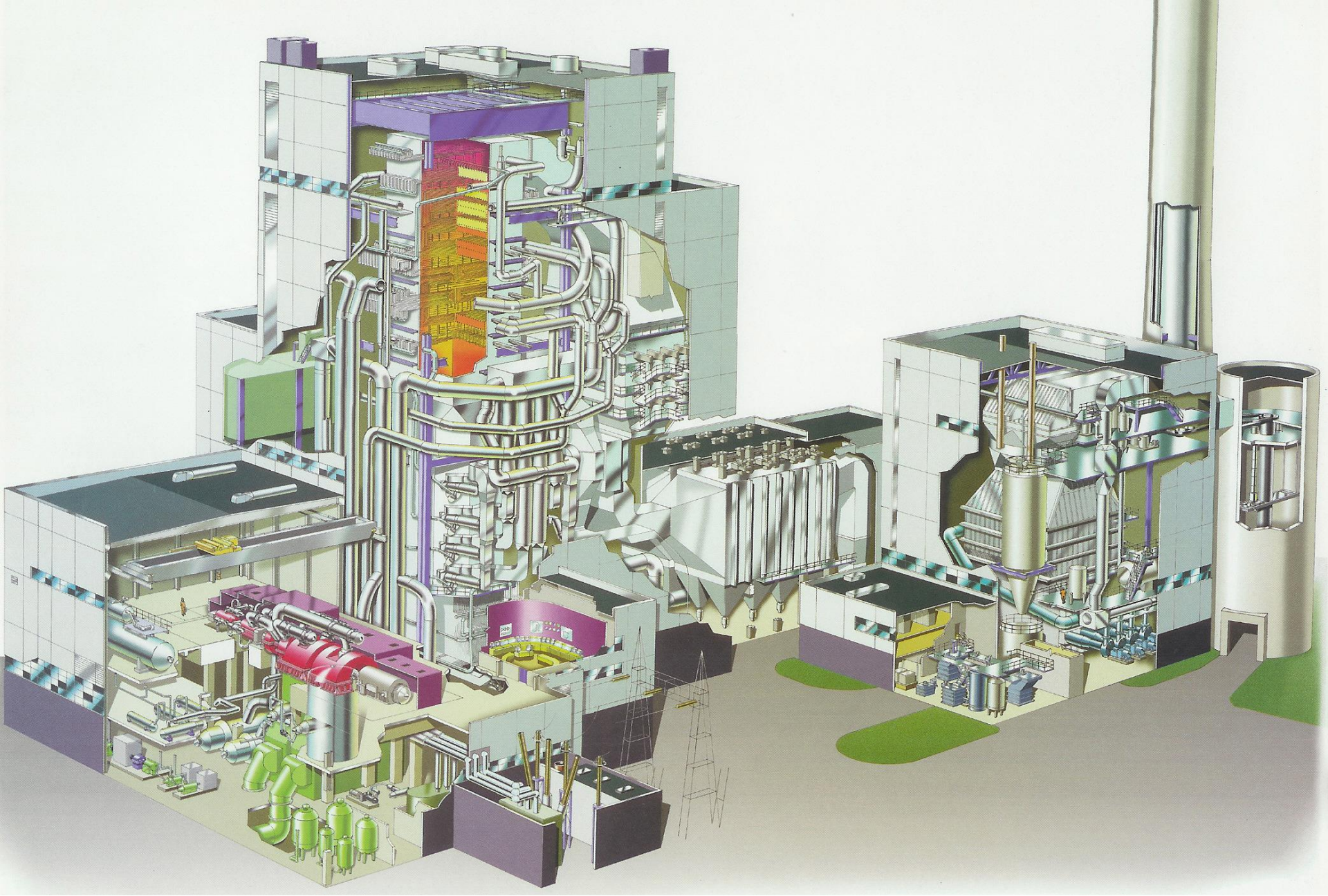

NORDJYLLANDSVÆRKET

Concepts and details chosen for unit 3.

- Ultra supercritical steam data
- Double reheat
- 13-stage condensate and feedwater preheating
- Competitive district heating
- Heat recovery from all component coolers
- Extensive use of frequency controlled motors
- A high level of desulphurization
- Industrial symbiosis
- Highly corrosion resistant material in sea water systems.
- High degree of automation
- Sewage treatment for water recycling.
- Rain water collection for desulphurization process

Main Technical parameters

Coal consumption, 100% load (t/h)	117
Heavy fuel oil consumption, 100% load (t/h)	68
Thermal efficiently (%)	
Electricity generation only	47
With full heating output	90

Boiler

Maximum steam output (kg/s)	280
Live steam temperature (ºC)	582
Live steam pressure (bar)	290
Boiler efficiency (%)	94.4

Steam turbine

Output, no district heating (MW_e)	405
Output, full district heating (MW_e)	344
Inlet pressure, VHP/HP/IPO (bar)	285/74/19
Inlet temperature, VHP/HP/IPO (ºC)	580/580/580

Generator

Rating (MW)	440
Voltage (kV)	21
Power factor (cos ϕ)	0.84

Main Technical parameters

District heating

Heat capacity, max/nom. (MJ/s)	468/436
Inlet temperature (ºC)	45/40
Outlet temperature (º C)	98/82
Cv value (no loss point)	0.12
DH accumulator volume (m^3)	25 000

Electrostatic precipitator , ESP

Collection surface projected (m^3)	34 560
Outlet dust loading (mg/Nm^3)	< 50
Dust removal efficiency (%)	99.9

Flue gas desulphurization, FGD

Flue gas volume (Nm^3/h)	1 300 000
Max. SO2 conc. In raw gas dry, 6% O2 (mg/Nm^3)	4 855
Desulphurization degree (%)	>97
Limestone consumption (t/h)	10.3
Quantity of gypsum, 10% wet (t/h)	17.4

NOx reduction, SCR

NOx content in raw gas, dry, 3% O2 (mg/Nm^3)	605
DeNOx degree (%)	> 90

Boiler

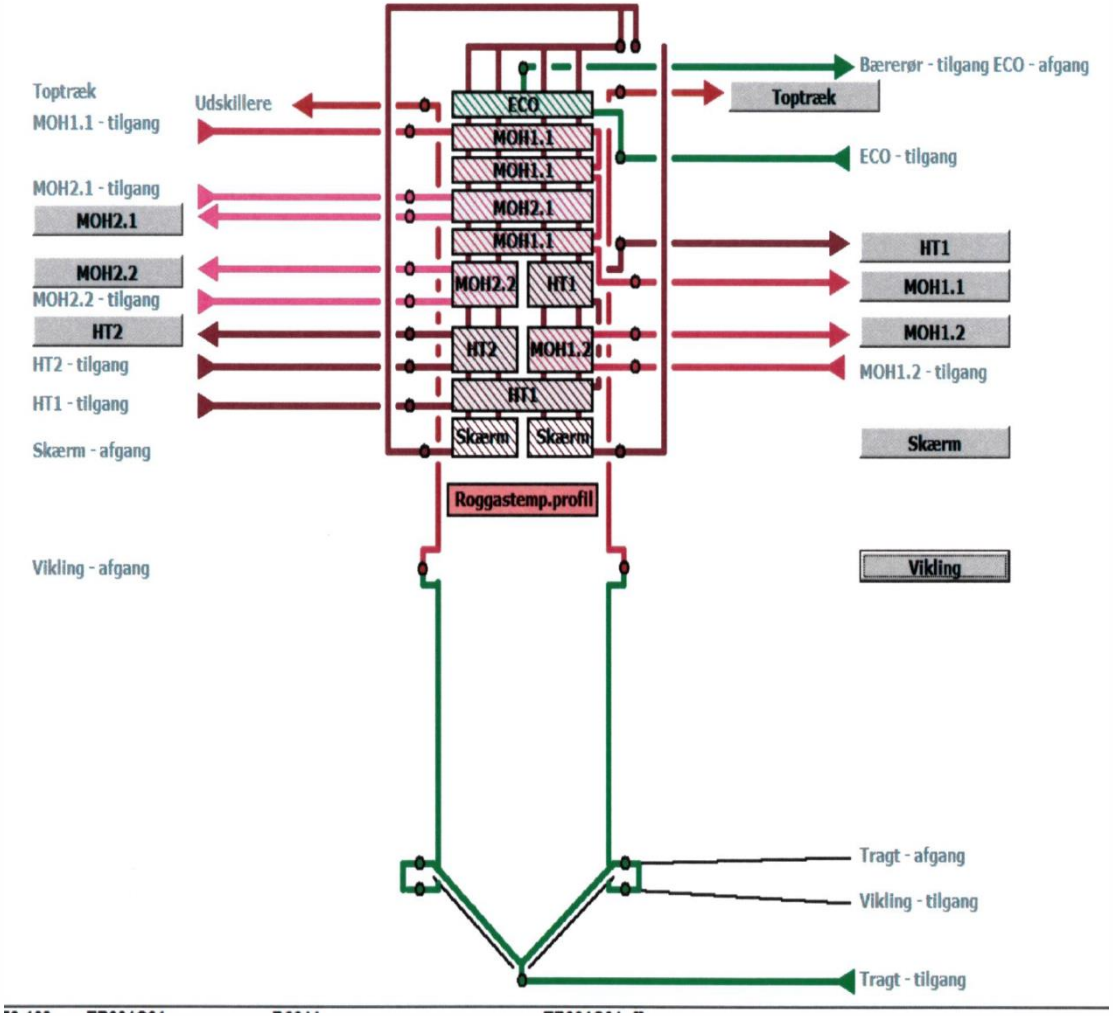

- Supercritical once through forced flow Benzon tower type.
- Sliding pressure operation, fully open turbine valves.
- Double reheat cycle, high efficiency and low humidity in LP turbines.
- 16 coal / oil dual fired burners , tangential firing system at four levels
- Each burner having internal air staging i.e. OBA (Low NOx – burners)
- In-furnace air staging (OFA)
- FGR control the IP outlet temperatures.
- 4 MPS mills with rotating clasifier

Air- & flue gas system

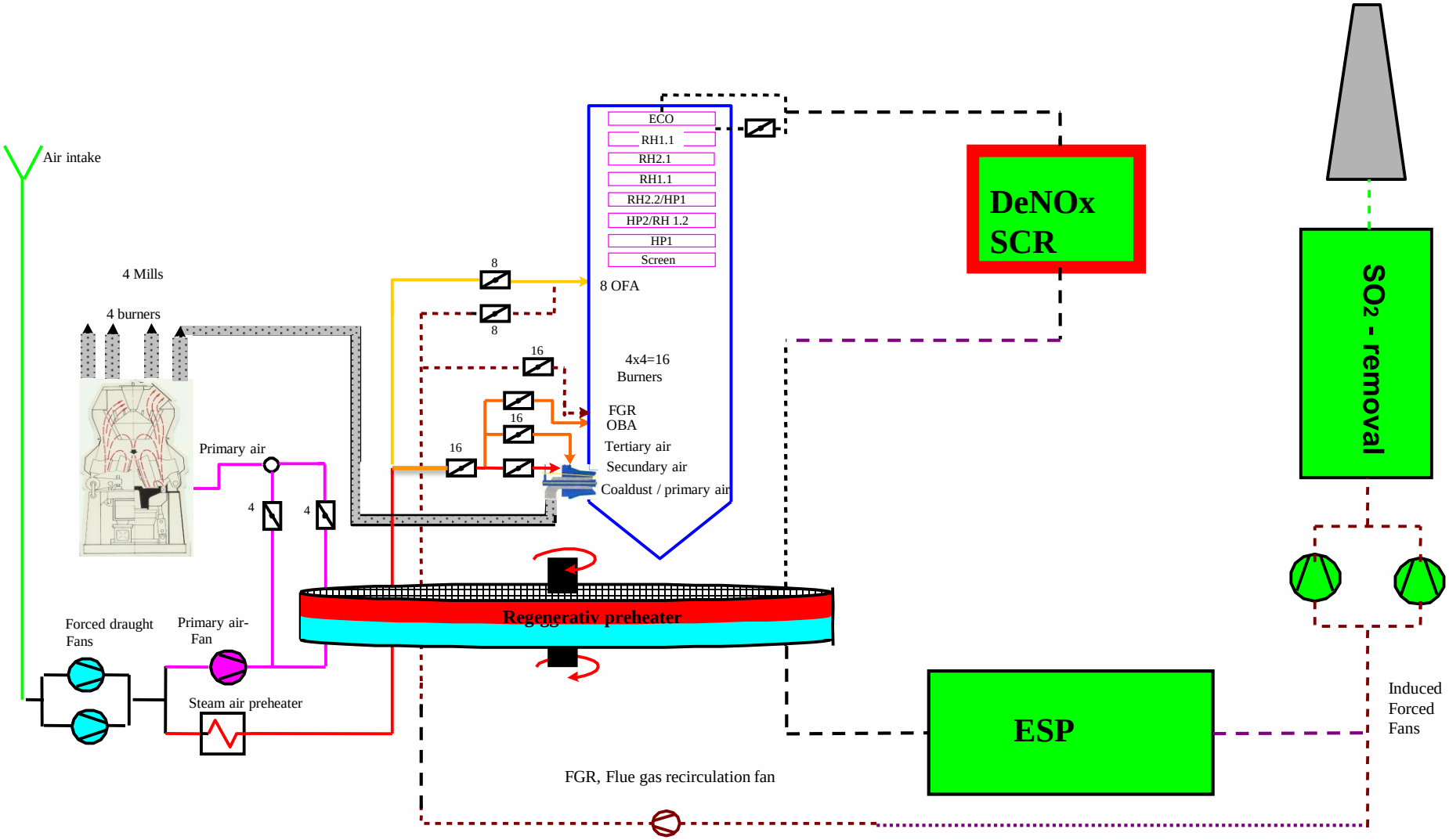

Turbine

VHP turbine

- Two inlets in total injection mode
- 14 stage expansion from 285 bar to 78 bar
- Three casings: Nozzle boxes, inner casing and outer casing.

HP/IP0 Turbine

- Combined in a common module
- Inner casing and outer casing fabricated exhaust ends
- HP and IP0 inlets are total ejection mode
- HP: nine stage single flow (74 bar to 20 bar).
- IP0: six stage single flow (19 bar to 7 bar).

IP1 / IP2 turbine

- Asymmetric double flow to suit district heating.
- Connection of the two turbines with two common single exhaust.
- Lower parts exhaust connected to district heat exchangers
- Upper parts exhaust connected to LP module.
- IP1: six stage
- IP2: eight stage

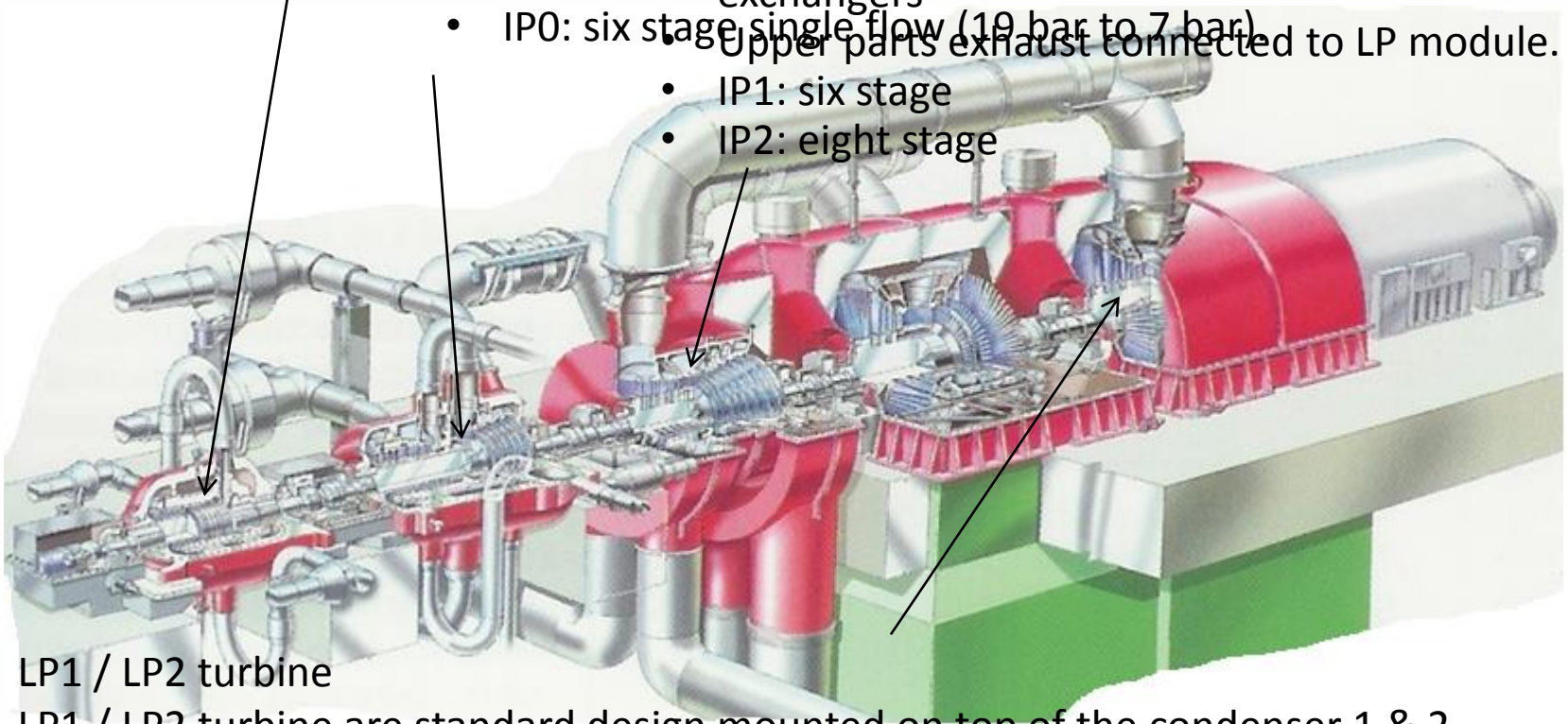

LP1 / LP2 turbine

LP1 / LP2 turbine are standard design mounted on top of the condenser 1 & 2.

Cooling water injection in LP1 / LP2 when operating in maximum district heating supply.

Turbine

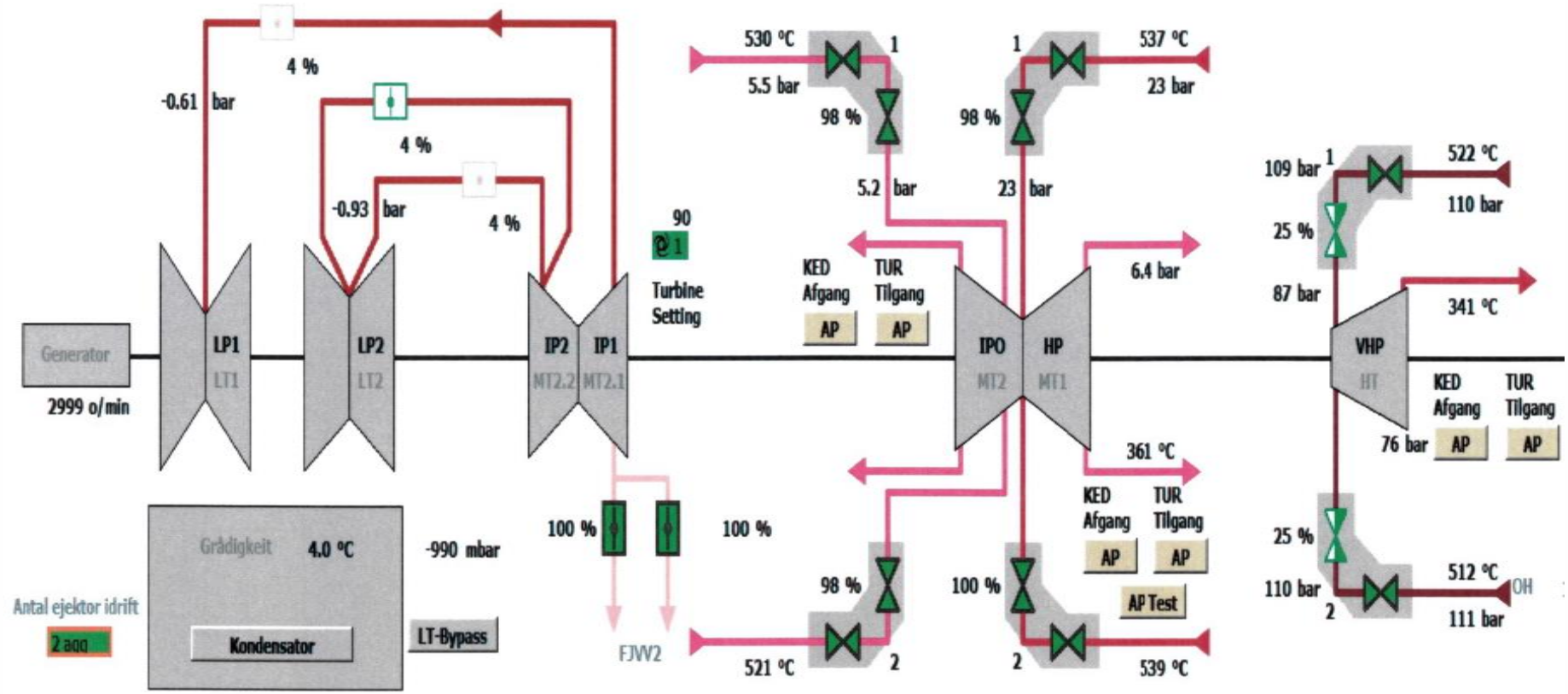

NORDJYLLANDSVÆRKET

Water & steam circuit

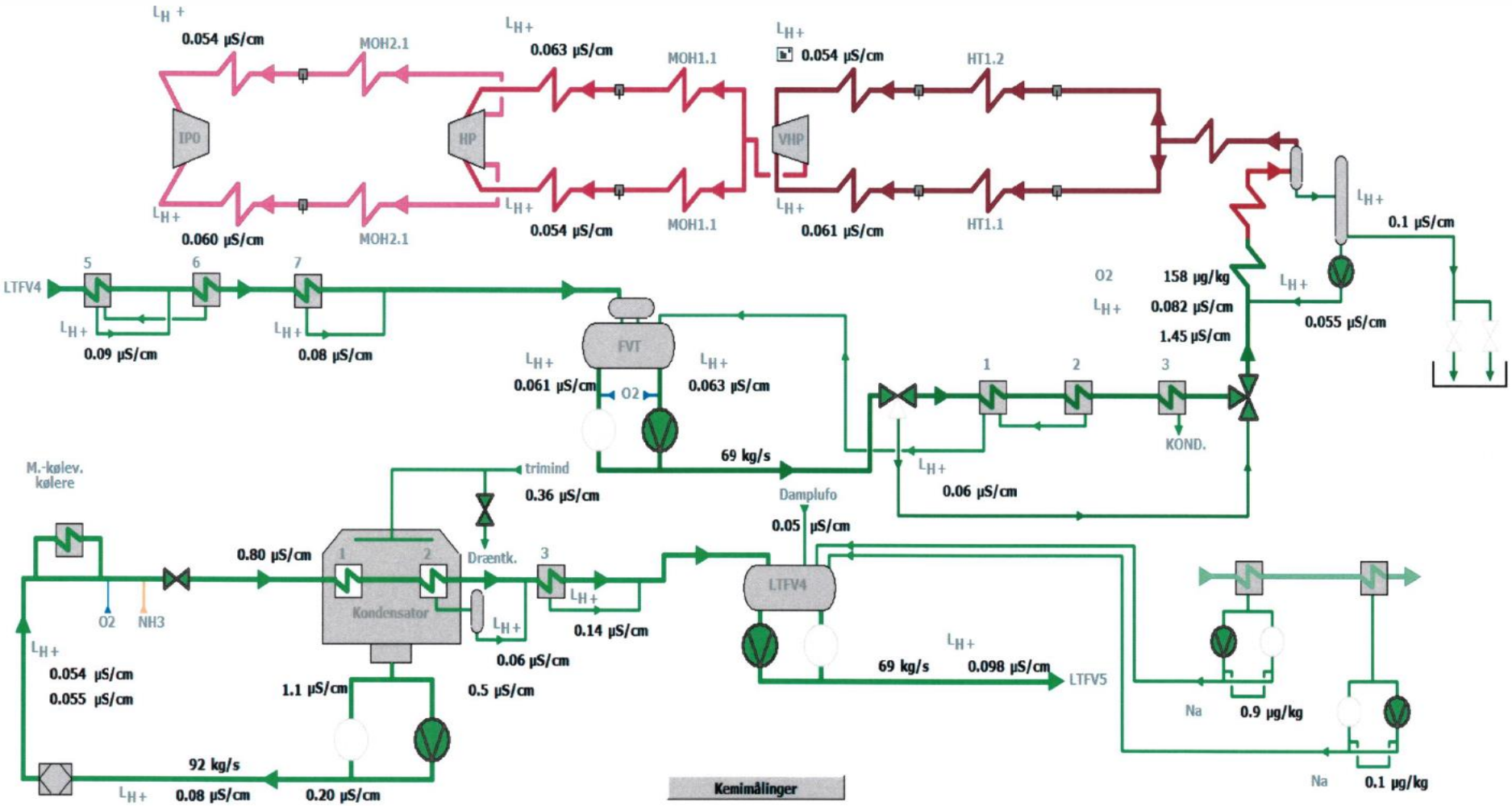

NORDJYLLANDSVÆRKET

CHP – load diagram

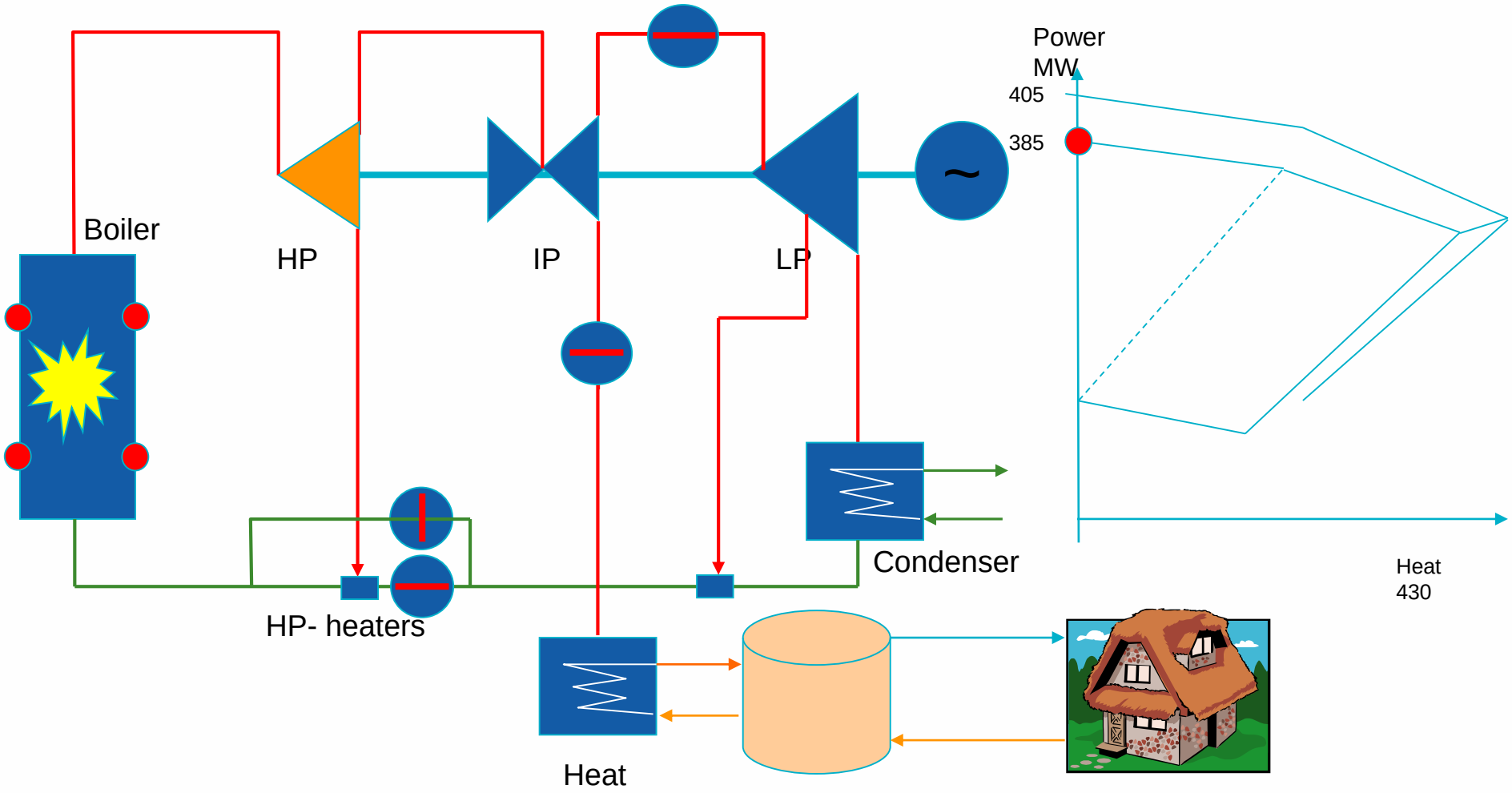

NORDJYLLANDSVÆRKET

Actual power & heat diagram

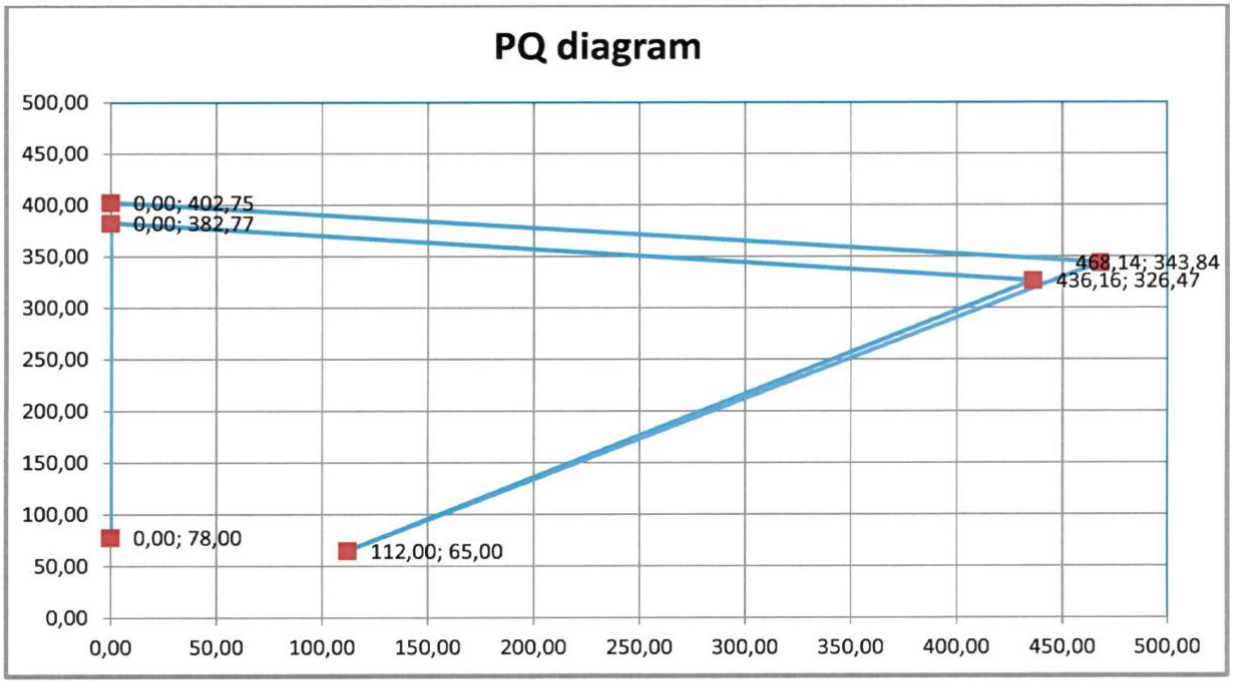

Punkt	P	Q
Overlast kondens	402,75	0,00
Overlast modtryk	343,84	468,14
Min. teknisk last modtryk	65,00	112,00
100% Last modtryk	326,47	436,16
100% Last kondens	382,77	0,00
Min. teknisk last kondens	78,00	0,00

Thermal efficiency and daily operation

- **The market conditions have changed:**
  - More wind- and solar power.
  - Stronger cable connections with the surrounding countries
  - Lower spot market price on electric power.

- **The daily operation is affected:**
  - High degree of ”circulation mode” , during night hours.
  - High degree of low load ”Benzon min.”
  - High load is often carried out in ”overload condition” (HPH bypass)

- **Thermal stress in VHP turbine**
  - It has been necessary to lower the temperature in certain load ranges due to thermal stress in VHP turbine.

- **Conclusion:**
  - These operating modes affects the efficiency negatively on a daily basis.
  - Unit 3 is still able to operate with a high efficiency as shown from the test run.
  - The test results are identical fra 2008 to 2015.

Performance Test 2015

Som målt under forsøg		100 % kondens	100 % modtryk	Overlast kondens	40% kondens	40% modtryk
Netto effekt	MW	386,3	325,8	411,1	151,6	116,8
Fjernvarmeeffekt	MJ/s	0	440,4	0	0	188,5
Brutto effekt	MW	411,5	352,5	438,5	161,2	126,8
Indfyret effekt	MJ/s	850,3	856,0	919,0	376,3	370,2
Kedelvirkningsgrad	%	94,3%	94,2%	94,3%	92,2%	92,5%
Netto el-virkningsgrad	%	45,4%	38,1%	44,7%	40,3%	31,5%
Total virkningsgrad	%	45,4%	89,5%	44,7%	40,3%	82,5%
Korrigeret til norm						
Netto el effekt	MW	384,4	371,2	406,9	155,0	145,1
Fjernvarme effekt	MJ/s	0,0	428,6	0,0	0,0	188,5
Kedelvirkningsgrad	%	94,3%	94,2%	94,3%	92,2%	92,5%
Netto el-virkningsgrad	%	45,8%	44,3%	45,6%	40,7%	38,3%

Flue gas desulphurisation plant, FGD - plant

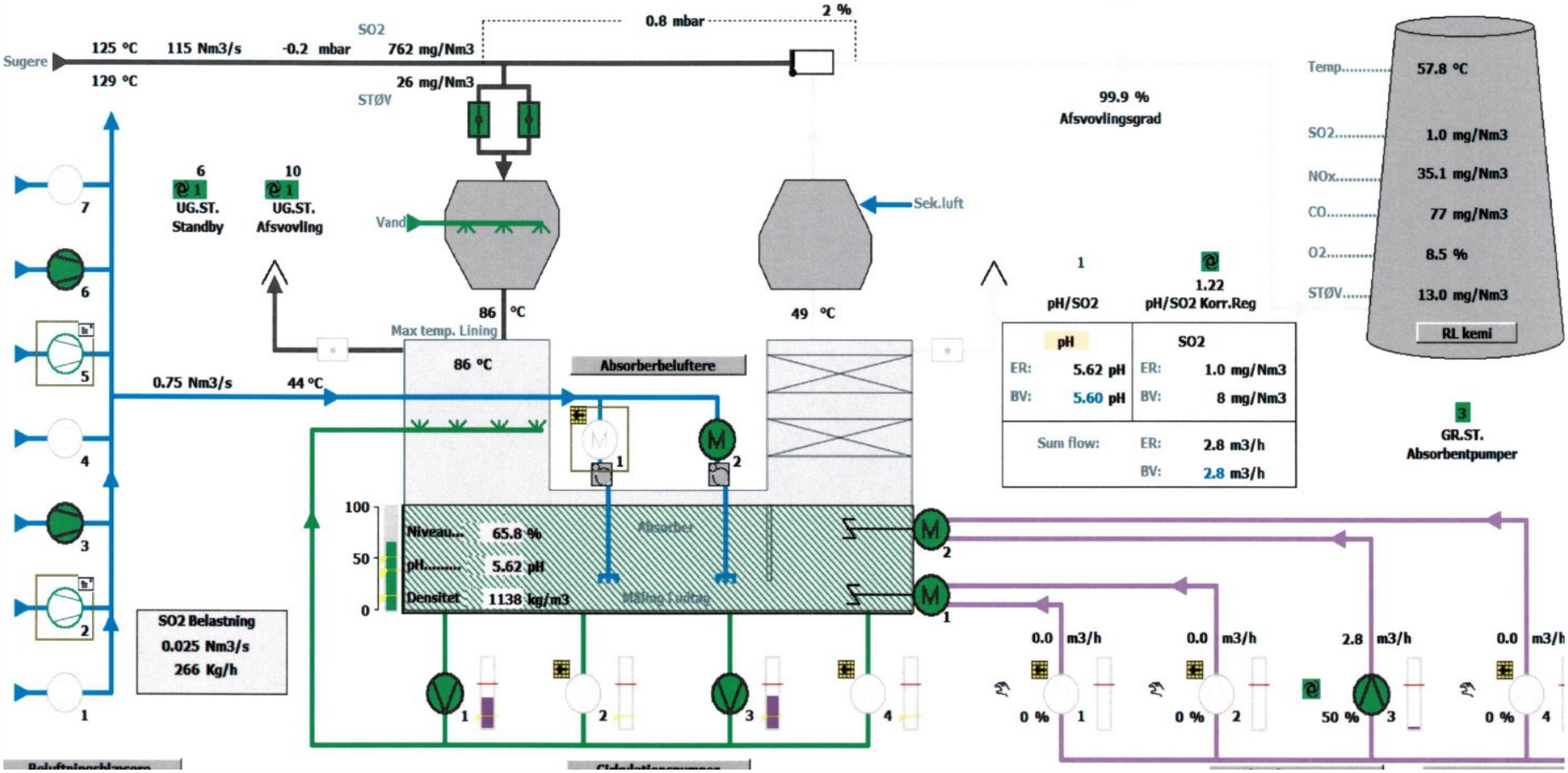

NORDJYLLANDSVÆRKET