VHP turbine
Crack in admission pipe

NORDJYLLANDSVÆRKET

AALBORG ENERGIKONCERN

Introduction

GEC Alstom turbine

Supercritical, double reheat
VHP, combined HP/IP0, IP1/IP2 and two LP cylinders

Inlet pressure [bar]: VHP/HP/IP0 – 285/74/19
Inlet temp [°C] : VHP/HP/IP0 – 580/580/580

Live steam flow [kg/s]: 280

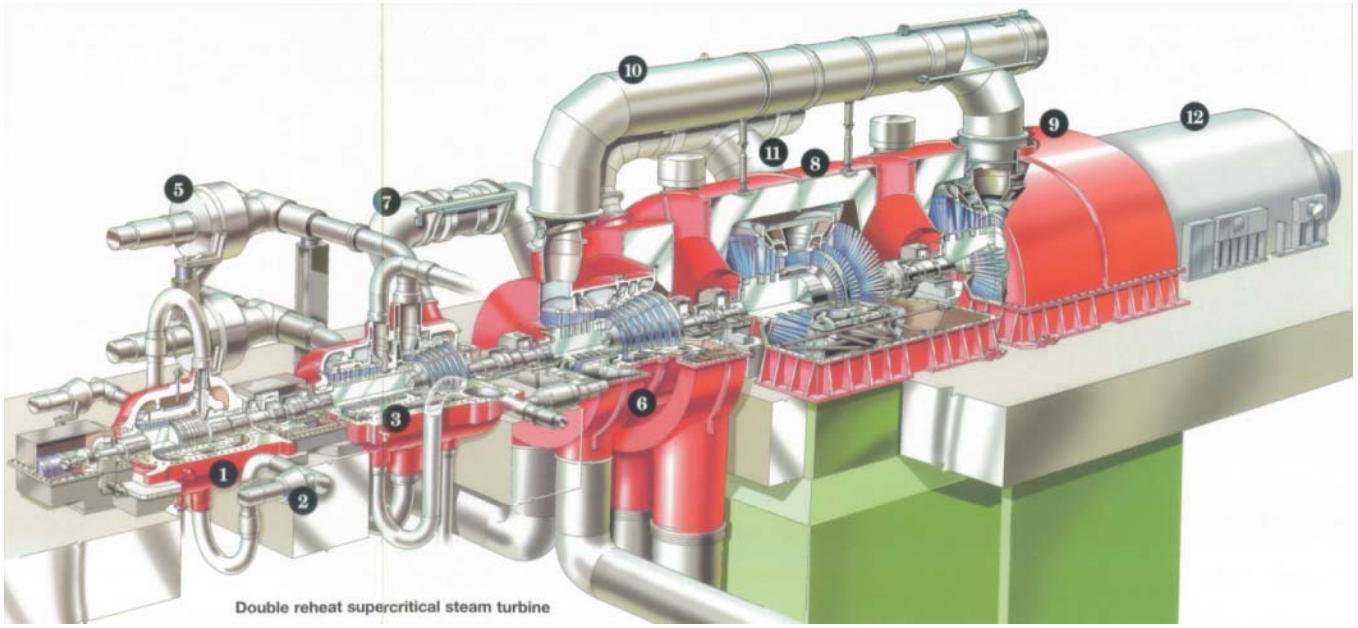

Double reheat supercritical steam turbine

Detection of crack

May 13th 2012 at 2000 o'clock

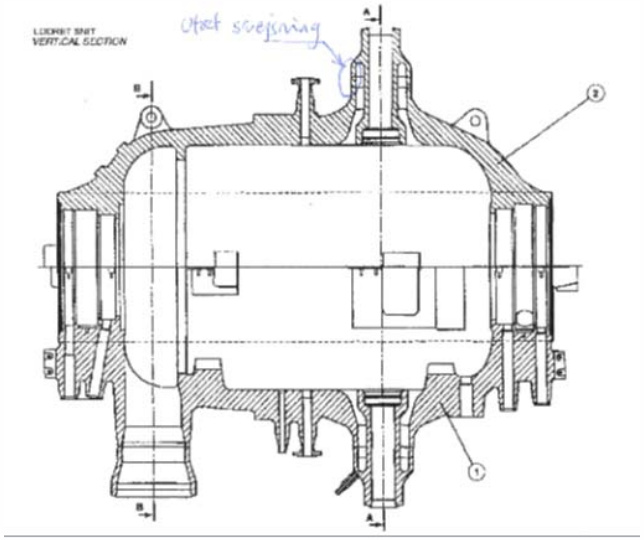

NORDJYLLANDSVÆRKET

Detection of crack, details

Detection of crack, details

The design consists of a grade 91 steam admission forging that is welded to the outer casing of the VHP turbine that is made of 2¼Cr1Mo cast steel. Between the grade 91 and the 2¼Cr1Mo cast outer casing a transition piece is welded made of a 2¼Cr1Mo ring (seamless pipe). The weld between transition piece and grade 91 is made with a 9Cr1Mo welding consumable, while the weld to the outer casing is made with a type 2¼Cr1Mo weld consumable.

This arrangement is used because the 9Cr transition weld requires stress relief at 730°C, and the outer casing casting is stress relieved at 700°C.

According to the OEM the design temperature of the weakest transition weld (between transition piece and grade 91) is 450 °C at a design pressure of 86 barg

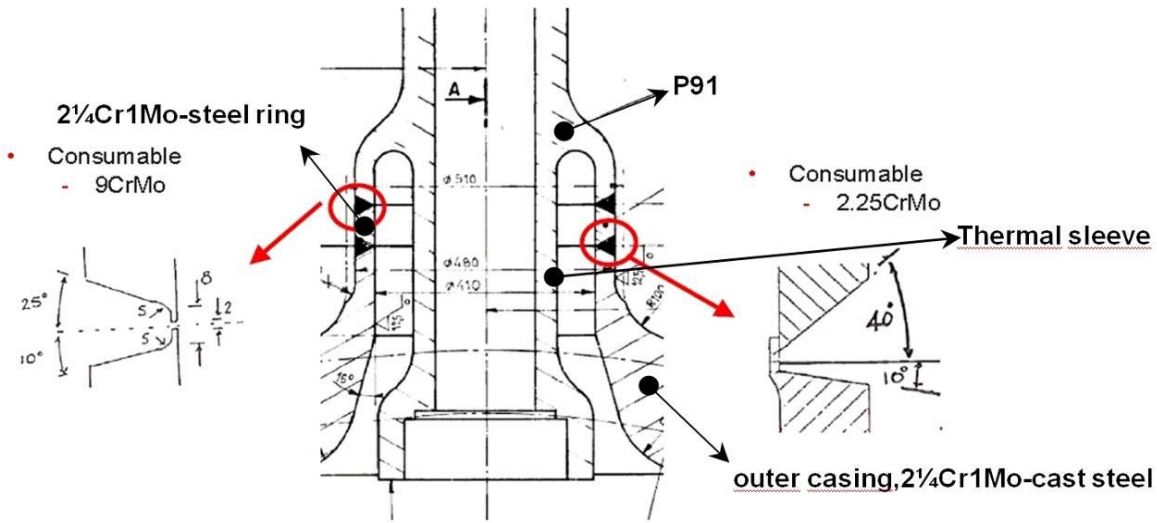

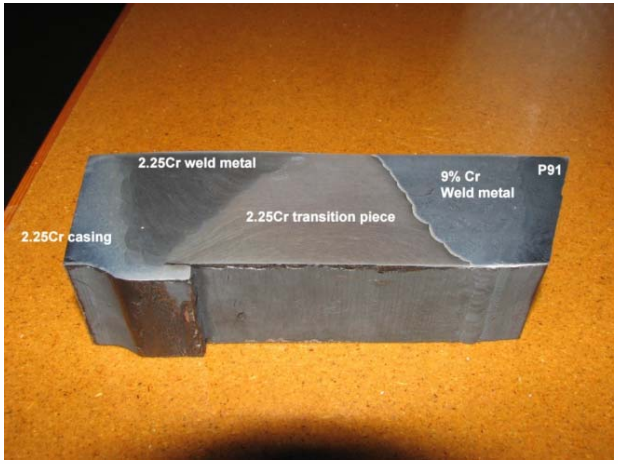

Repair and analysis (RCA)
Repair

1. Repair in Berlin at the OEM factory
2. Repair on site: OEM, Alfa Laval and Force

OEM recommend repair 1:1 (Dimensions and material)

Back in operation: September 4th 2012

Repair and analysis (RCA)

Analysis

Analysis work, corporation between OEM, Vattenfall and DTU

- Transverse circumferential crack ~480 mm long, visible on the outer surface.
- The crack was continuous and fairly open (1-2mm) at its widest point.
- In-situ metallographic examination indicated that the crack was associated with the 9CrMo Weld Metal/2¼CrMo transition piece interface. The visible crack tips appeared to terminate in the HAZ region of the transition piece, just below the 9CrMo weld fusion boundary.

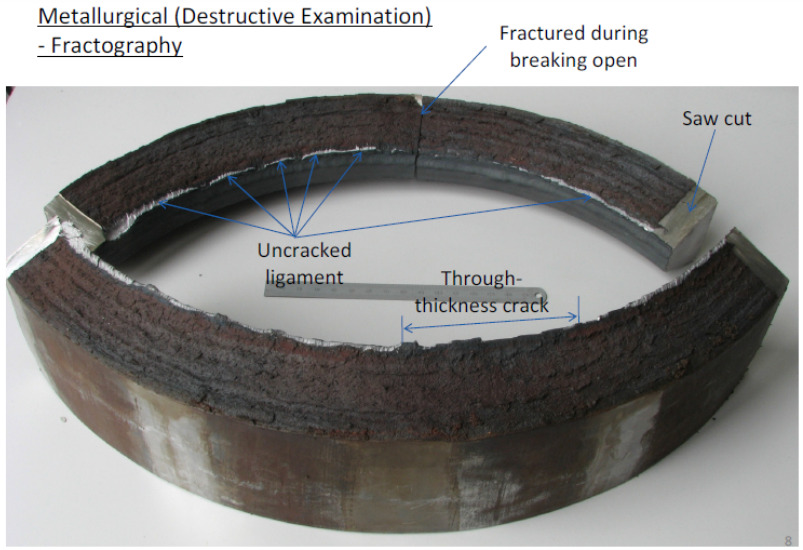

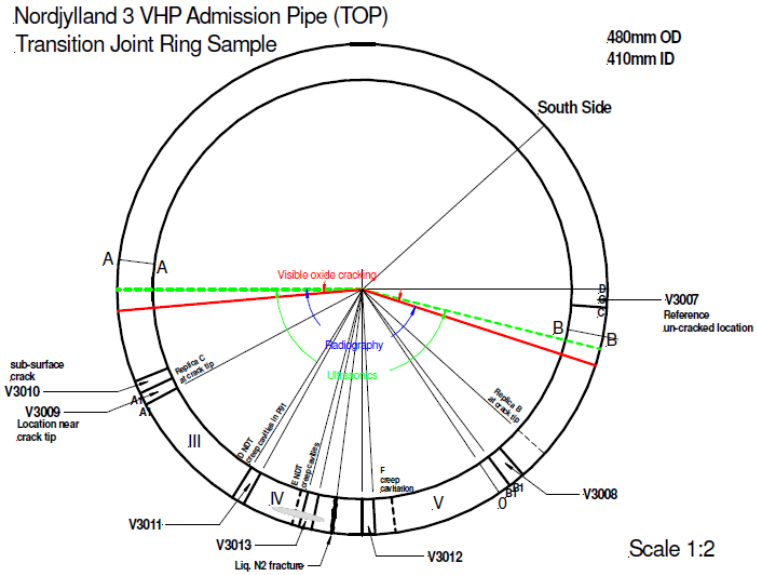

NORDJYLLANDSVÆRKET

Repair and analysis (RCA) Analysis

- The crack path observed in the sections was found to be predominantly in the HAZ (type IV region) of the 2¼CrMo transition piece. However, the crack path was observed to deviate between the Type IV region and the CDZ along the length of the crack.

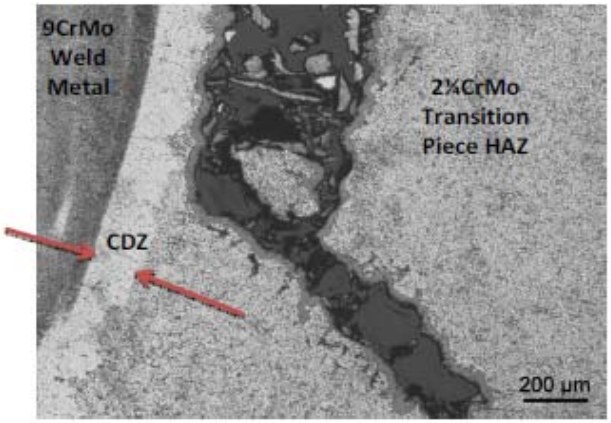

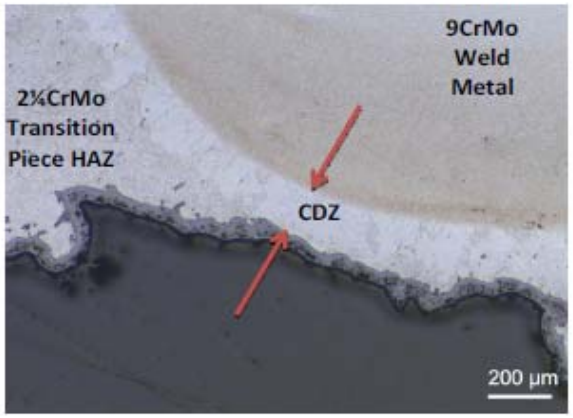

- This observation of a duplex fracture location (type IV and CDZ) is consistent with Alstom and ECCC laboratory uniaxial creep rupture tests on 9CrMo/ 2¼CrMo cross weld samples tested at 565°C and 580C.

Repair and analysis (RCA) Analysis

The crack on sample V3012. The 9CrMo weld metal is to the left.

The fully decarburised zone is visible in the enlarged section.

Blue and red arrows in the left picture indicate locations of fully decarburised zones. Red arrows are suspected crack initiation sites. Blue arrows in the right picture indicate areas with microcrack formation.

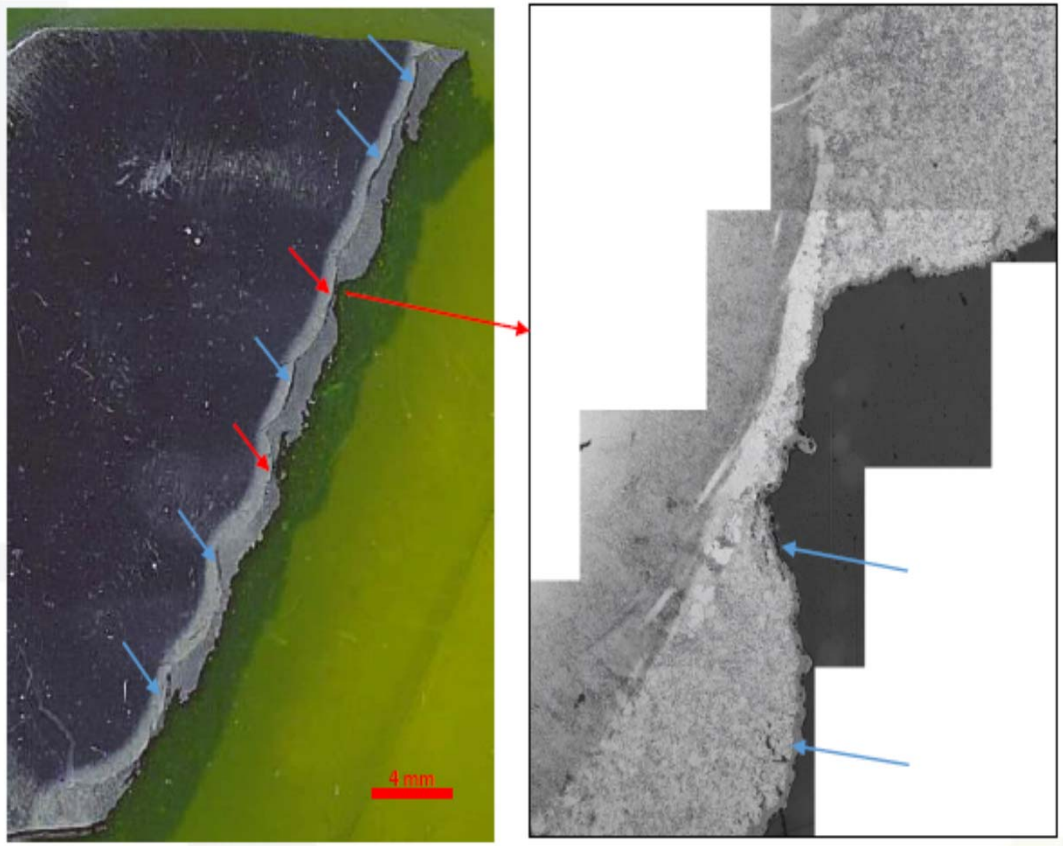

Repair and analysis (RCA)
Analysis

2.25CrMo: Data used to assess temperature based on steamside oxide thickness

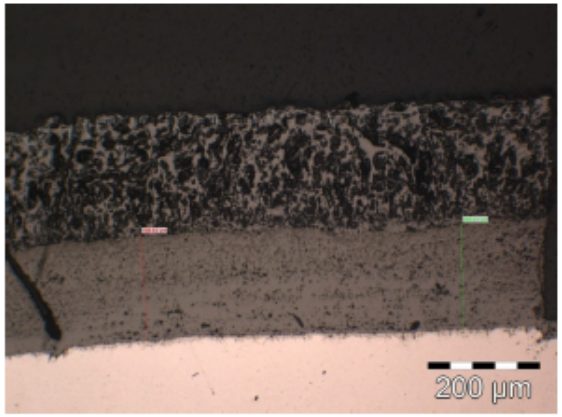

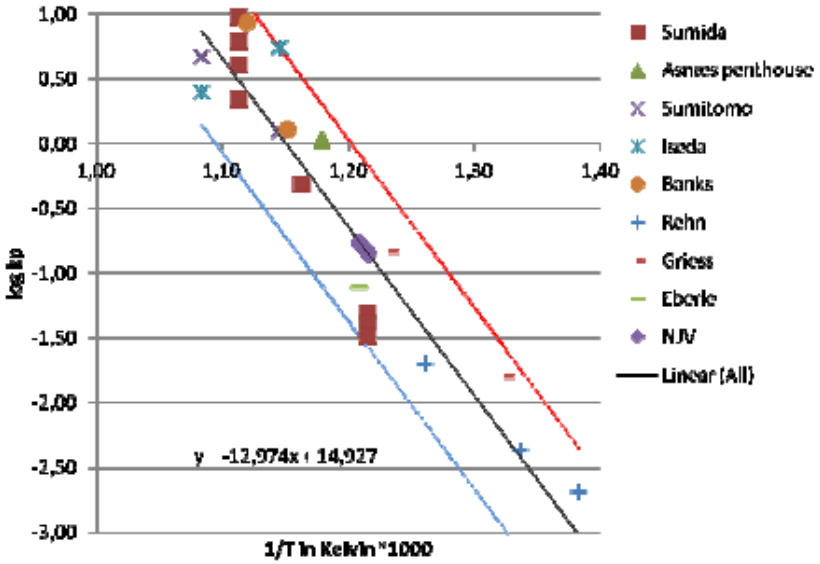

Measurements of the inner oxide 2.25CrMo transition piece ranged from 170-190µm. Based on this data the temperature is estimated to be 549-554°C. (+40C and -35C with scatterband).
Since the data for NJV are in the middle of the data band, there is a better fit and the assessment is more reliable.

Repair and analysis (RCA)
Analysis, conclusion

- Creep is the main cause of cracking.
- Cracks are initiated in the area 9Cr weld and 2.22Cr transition piece.
- The weld and weld materials are according to specifications.

- **OEM concluded as follows:**

  The top VHP inlet steam leak is due to creep cracking in the 2.25CrMo transition piece HAZ/CDZ

Mechanical analysis (RCA)

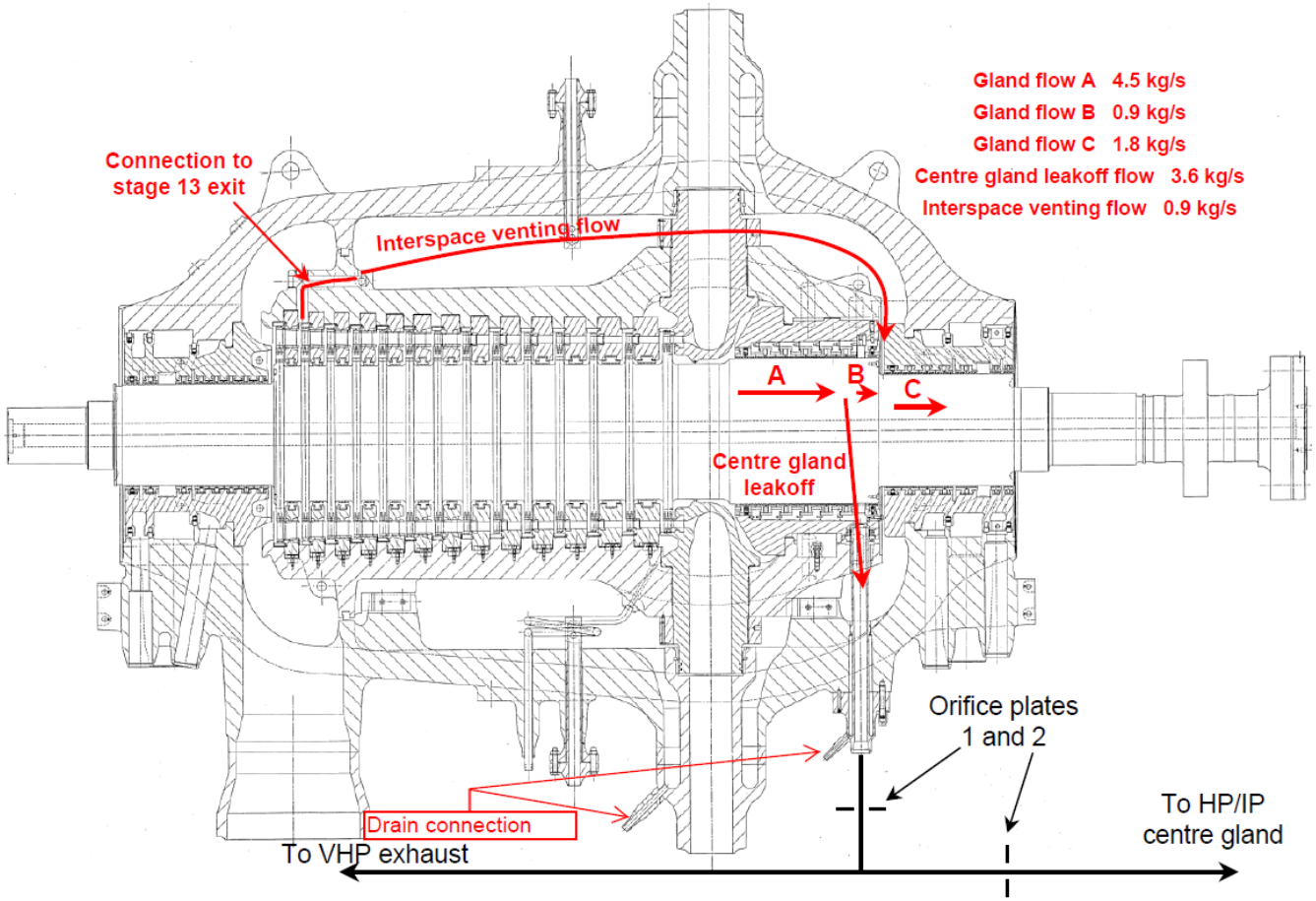

Mechanical analysis (RCA)

- **Temperature measurements**

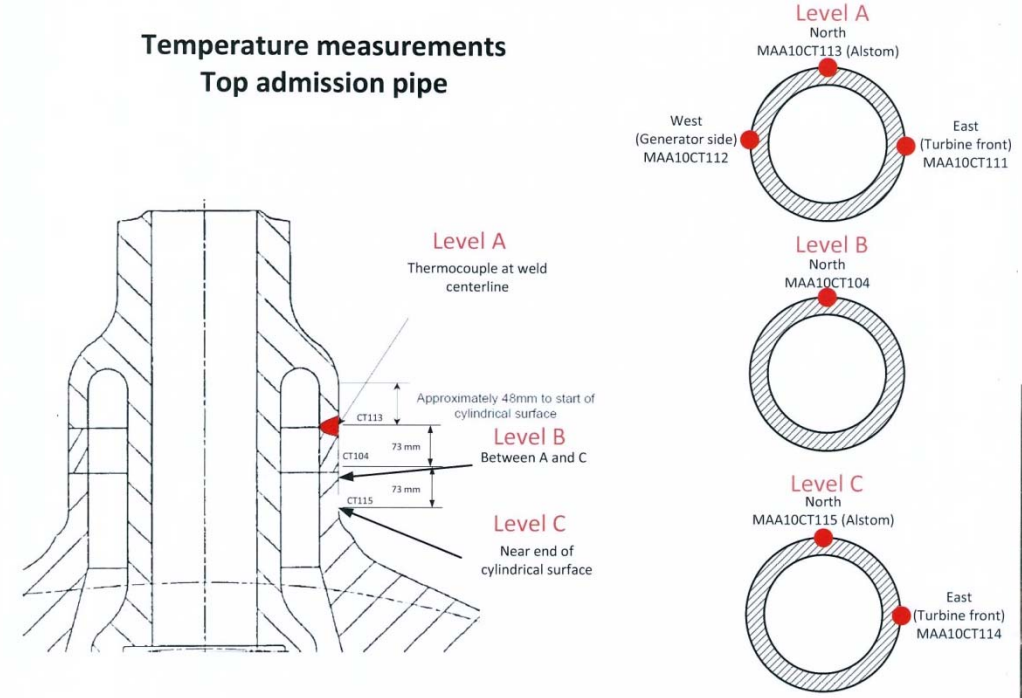

Mechanical analysis (RCA)

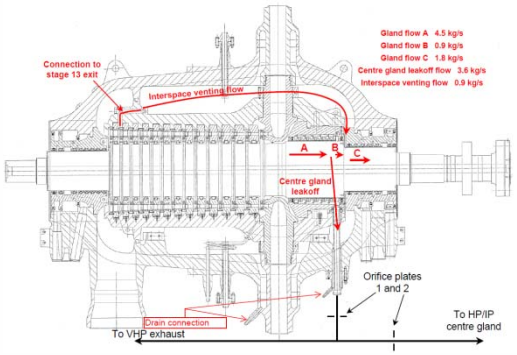

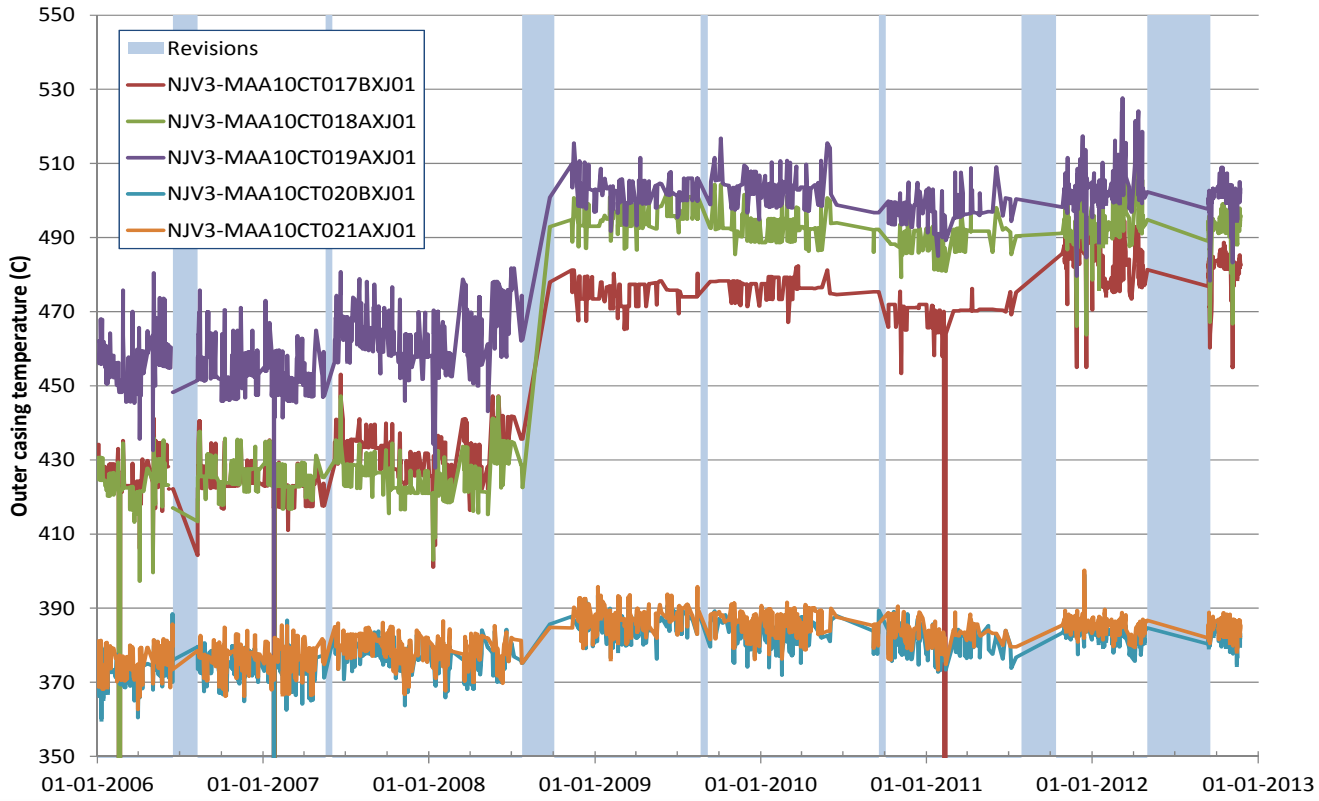

Mechanical analysis (RCA)

Tests

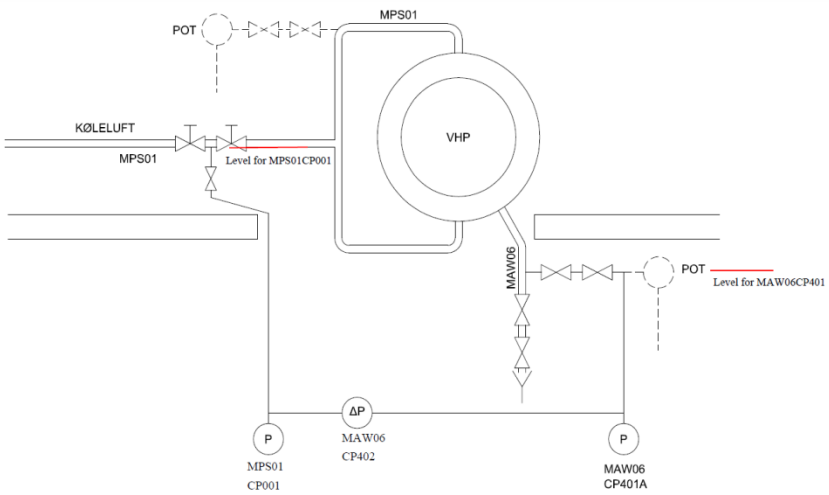

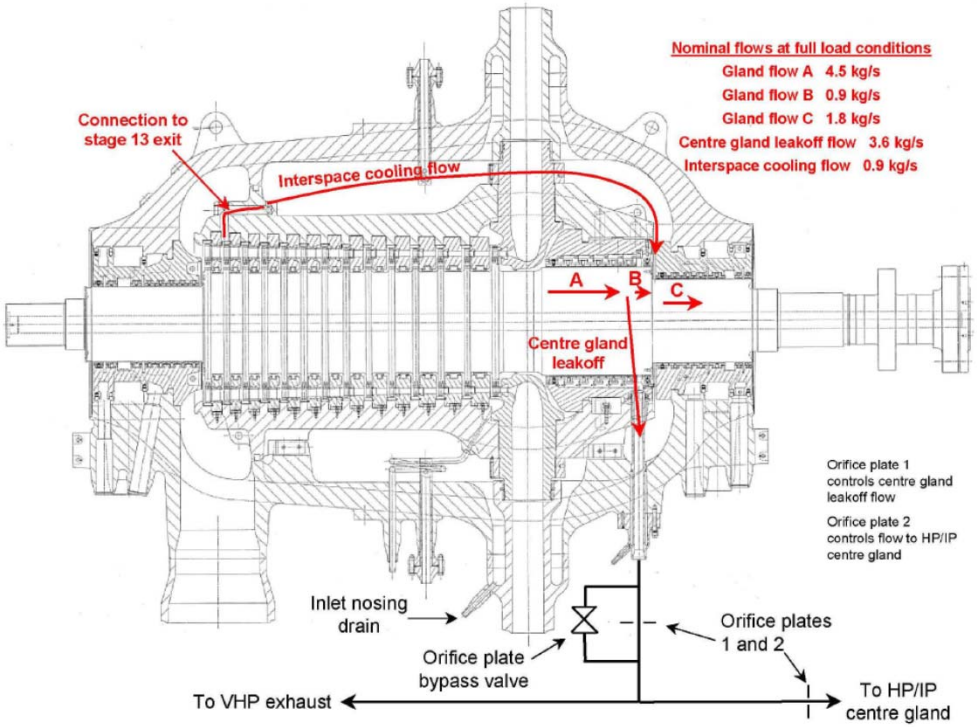

Mechanical analysis (RCA)

- **OEM recommendation**

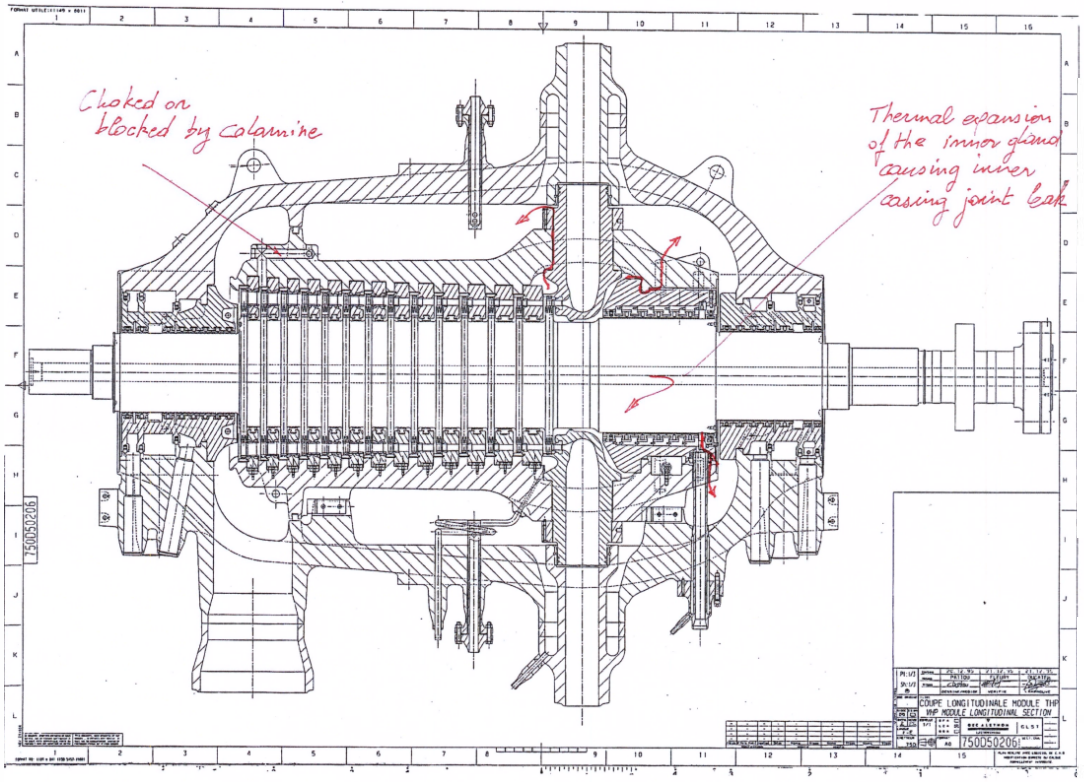

OEM Option 2

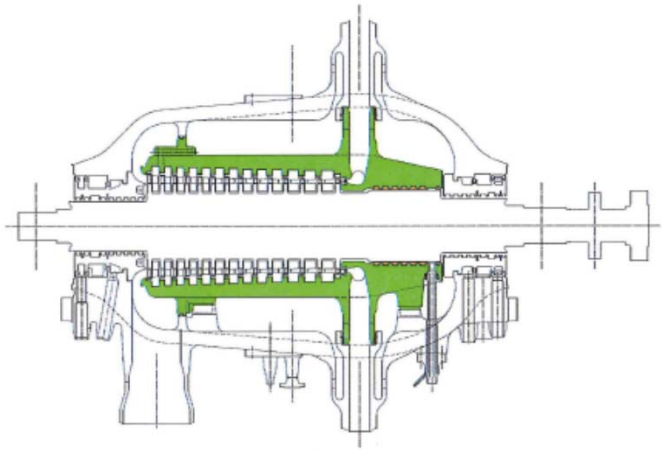

OEM Option 3

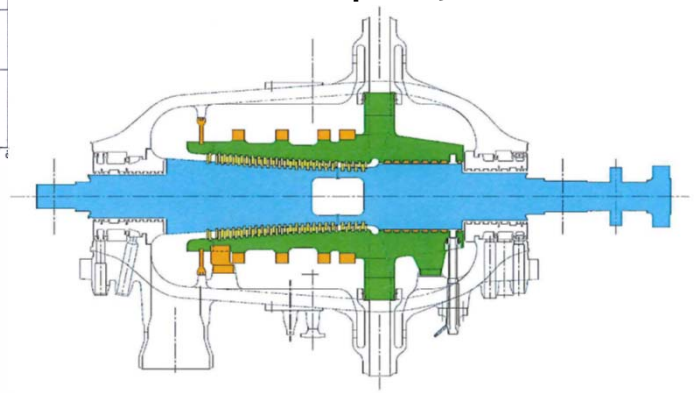

Mechanical analysis (RCA)

- **Today, loss of performance**

- **As-is**
  - 100 % back pressure mode:
    - Fuel 849,5 MJ/s
    - Heat 435,5 MJ/s
    - Power 333,2 MW

- **Alstom rebuild (option 2)**
  - 100 % back pressure mode:
    - Fuel 848,8 MJ/s
    - Heat 435,8 MJ/s
    - Power 338,6 MW

Mechanical analysis (RCA)

- **Today, surface temperature**

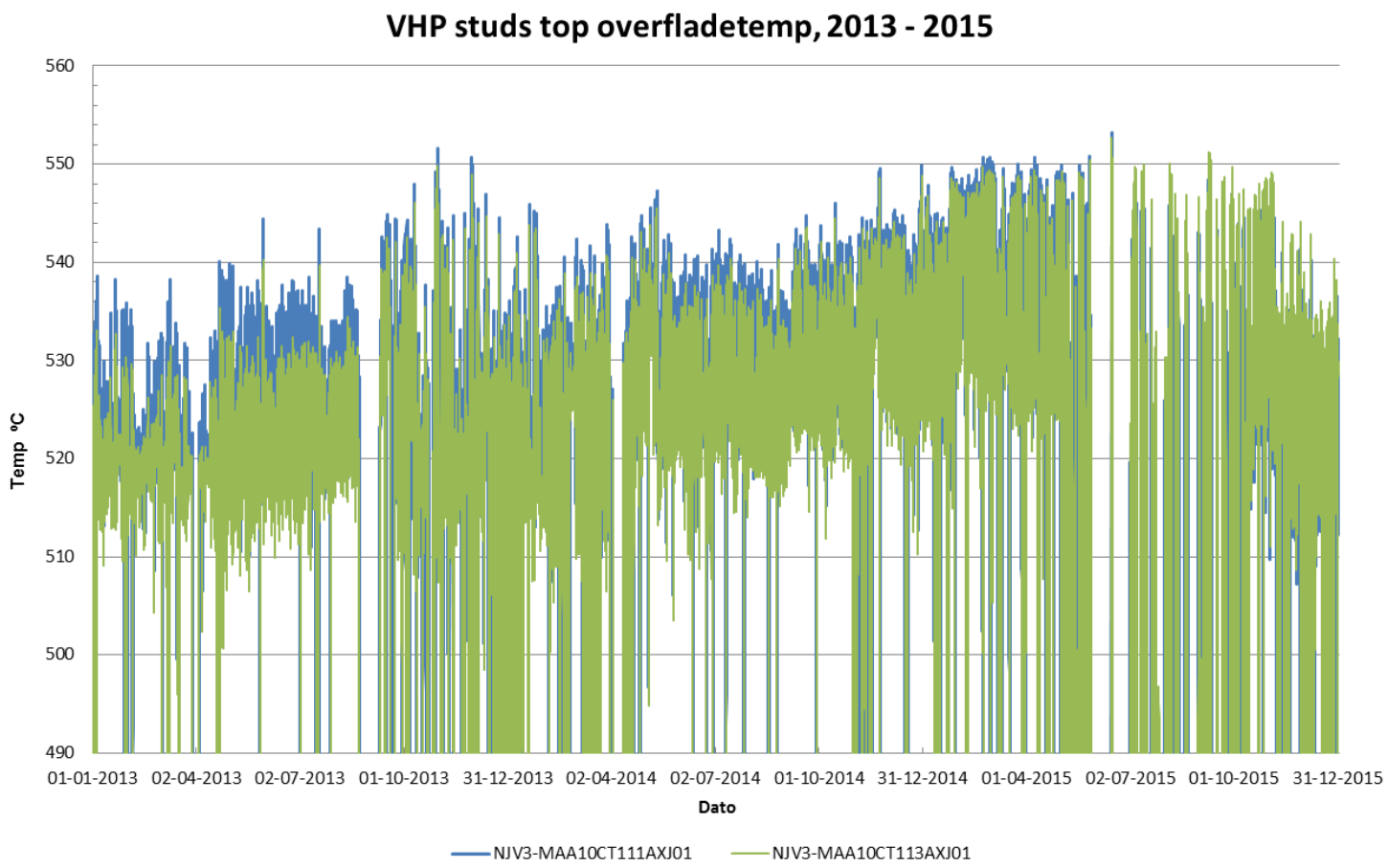

NORDJYLLANDSVÆRKET

Mechanical analysis (RCA)

- **Today, Lifetime calculation**

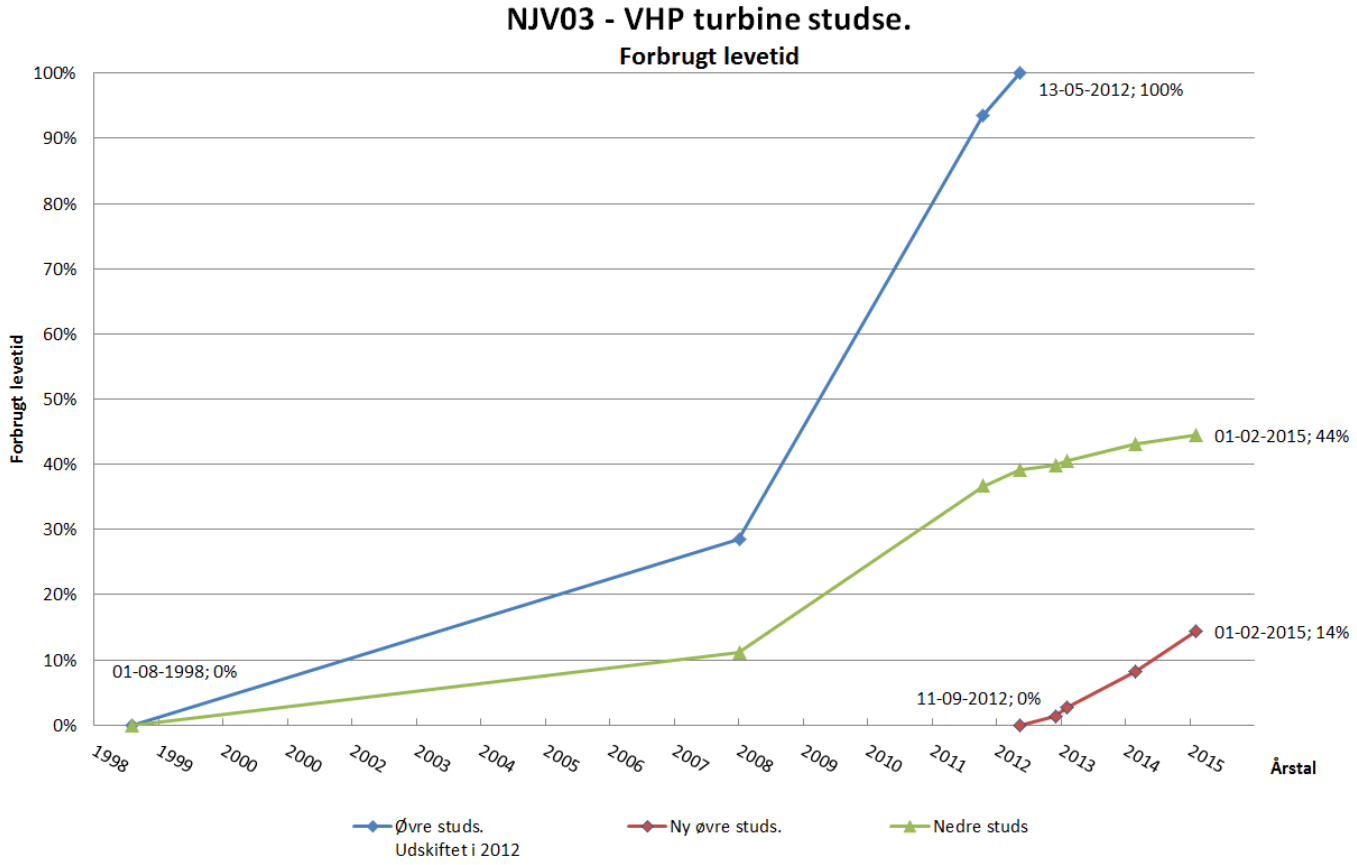

NORDJYLLANDSVÆRKET

Mechanical analysis (RCA)

- **Today, Lifetime calculation**

Lifetime calculation on NJV3 VHP turbine nozzles

Date 15-03-2015 15:42
Rev. A

Conditions

1a) Lifetime calculations until 15-05-2012, is based on cyclic values every: 1 hours
1b) Lifetime calculations from 15-05-2012 to 01-03-2013, is based on cyclic values every hour.
2) NJV3 MAA10CT011 are used to estimate the weld temperature before date 13.05.2012, see correlations with new weld temperatures.
3) Observed date 02.08.2012, the supports at the steam chest MAA10AA001 did not carry sufficient load which correspond to a load 10% less than optimum. The bending moments are calculated with Rohr2.
4) The mean creep rupture strength values are reduced with a reduction factor to meet 100% consumed lifetime at crack date 13.05.2012.
The size of the reduction factor is lower than the standards prescribe, which are expected, because only uniaxial stress state are used in this calculation.
5) The use of NJV3 MAA10CT011 to estimate the weld temperature in this period are unsure because of possible leaks from inner housing flange.
6) The external forces are calculated in accordance to spring compression at MAA10AA002 supports reported by Alstom date 12.09.2008 and 30.09.2011. The bending moments are calculated with Rohr2.
7) The external forces are calculated with optimal alignment of supports at MAA10AA001. The bending moments are calculated with Rohr2.

Displacement factor to NJV3 MAA10CT011

Top 1,0207
Bottom 1,0008

Temperaturtillæg = 0 °C i perioden 11-09-2012 til 01-02-2015

0

Material data

Delivery Norm	EN10222-2		
Steel nr.	1.7383		
Steel name	11CrMo910		
Creep strength factor	0,8	Acc. to EN13480 5.3.2.1	1 = mean creep rupture strength
Weld factor	0,6591	0,6456	
Reduction factor 4)	0,527		

Actual lifetime consumed until crack

NJV3 operation period				Top Nozzle 3)	Bottom Nozzle 6)	Top Nozzle	Bottom Nozzle	Top Nozzle	Bottom Nozzle	Top Nozzle	Bottom Nozzle
From date	To date	days	hours	$\sigma_{axial,\ external}$ N/mm2	$\sigma_{axial,\ external}$ N/mm2	Used every 200.000hr %	Used every 200.000hr %	Lifetime used hours	Lifetime used hours	Lifetime used %	Lifetime used %
01-08-1998	31-12-2007	3.439	82.536	3,6	1,1	69%	27%	57.064	22.411	29%	11%
01-01-2008	14-10-2011	1.382	33.168	3,6	1,1	392%	154%	129.978	50.931	65%	25%
14-10-2011	13-05-2012	212	5.088	3,6	1,1	255%	99%	12.959	5.036	6%	3%
							Total until crack	200.000	78.378	100%	39%
							New nozzle	-200.000		-100%	

Actual lifetime consumed after crack

NJV3 working period				Top Nozzle 7)	Bottom Nozzle 6)	Top Nozzle	Bottom Nozzle	Top Nozzle	Bottom Nozzle	Top Nozzle	Bottom Nozzle
From date	To date	days	hours	$\sigma_{axial,\ external}$ N/mm2	$\sigma_{axial,\ external}$ N/mm2	Used every 200.000hr %	Used every 200.000hr %	Lifetime used hours	Lifetime used hours	Lifetime used %	Lifetime used %
11-09-2012	01-02-2015	873	20.952	1,9	1,1	138%	51%	28.985	10.600	14%	5%

Total lifetime consumed

Period		Top Nozzle	Bottom Nozzle
01-08-1998	31-12-2007	29%	11%
01-01-2008	14-10-2011	65%	25%
14-10-2011	13-05-2012	6%	3%
New nozzle		-100%	0%
11-09-2012	01-02-2015	14%	5%
Sum		**14%**	**44%**

Remaining lifetime if operation is as in following periods

Period		Top Nozzle years	Bottom Nozzle years	
01-08-1998	31-12-2007	**28**	**47**	
01-01-2008	14-10-2011	**5**	**8**	5)
14-10-2011	13-05-2012	**8**	**13**	
11-09-2012	01-02-2015	**14**	**25**	

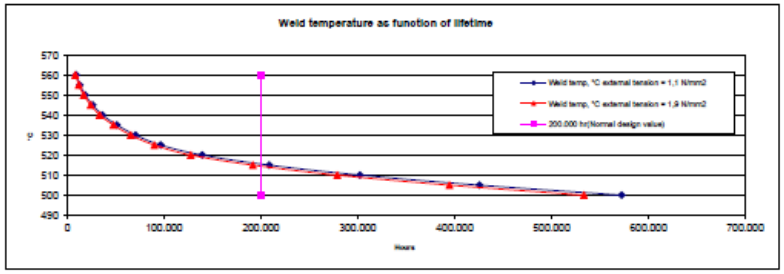

NORDJYLLANDSVÆRKET

Dimensions

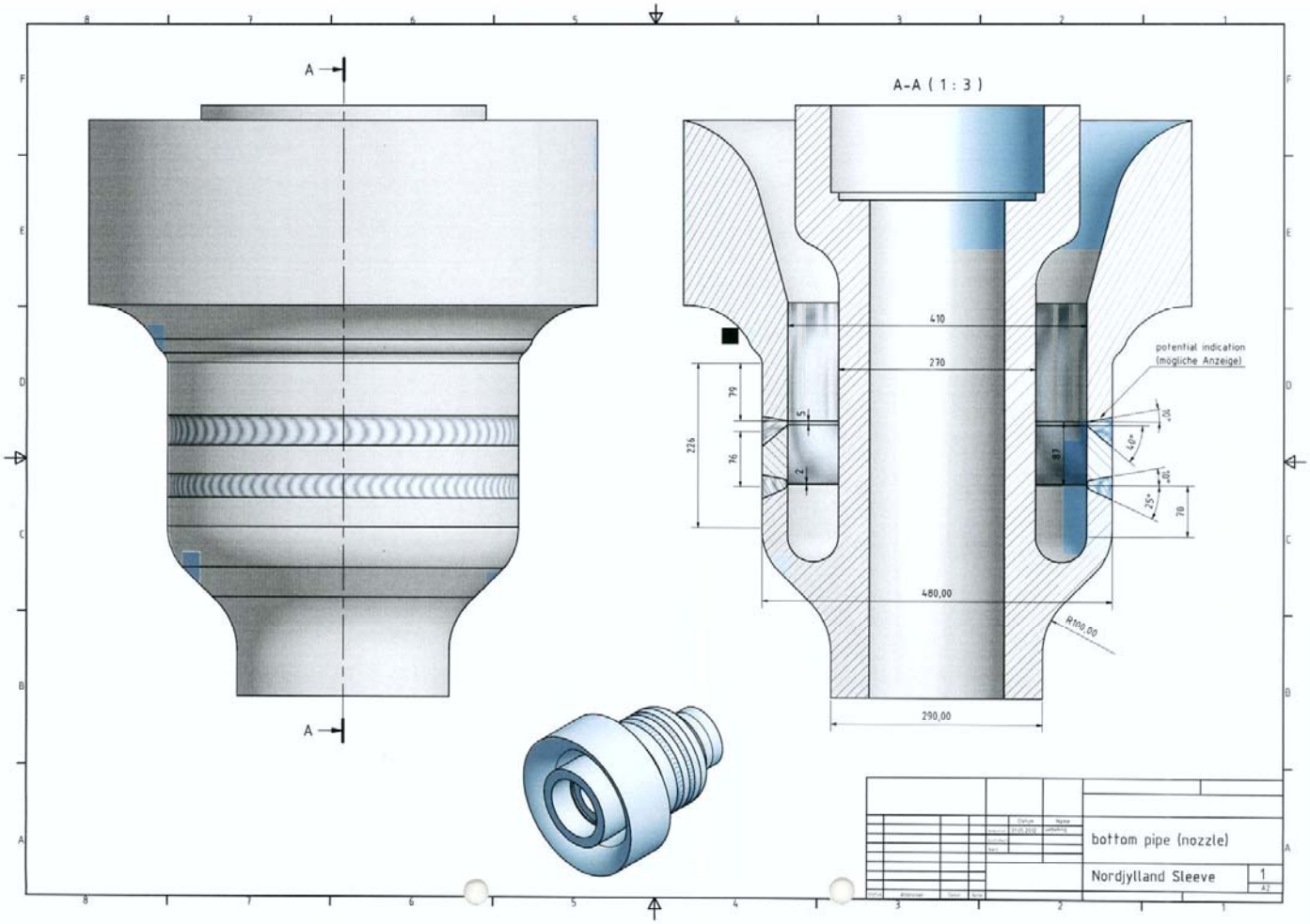

NORDJYLLANDSVÆRKET