International Association for the Properties of Water and Steam

Monitoring and Analyzing Total Iron and Copper in Fossil and Combined Cycle Plants

David Addison, Thermal Chemistry, New Zealand;
B. Dooley, Structural Integrity, USA
D. Lister, University of New Brunswick, Canada; and
K. Thomsen, Vattenfall, Denmark.

ICPWS
Greenwich University
4th September 2013

Introduction and Rationale for Corrosion Product Sampling (CPS)

Significant problems with reliable and effective corrosion product sampling observed worldwide in fossil & combined cycle gas turbine (CCGT) plants

Corrosion product levels <u>critical</u> to determining effectiveness or otherwise of cycle chemistry programs - Total Fe and Cu levels key aspects of IAPWS cycle chemistry Technical Guidance Documents (TGD)

Critical activity either not done at all or done incorrectly

Key Issues with Corrosion Product Sampling

1. **Incorrect sample collection systems**
   - ***Poor system design, insufficient flow rates, no sample preservation etc.***

2. **Incorrect sampling methodology**
   - ***Time of day rather than unit operation focused***

3. **Incorrect analytical method**
   - ***Detection limit too high, soluble only***

4. **Failing to account for particulates**
   - ***No sample digestion step***

Sample Locations for Corrosion Product Sampling – Fossil/CCGT/Cogeneration

All Plants:

- *Air Cooled Condenser (ACC) Outlet (if installed)*
- *Condensate Filter Outlet (if ACC installed)*
- *Economiser Inlet*

Fossil:

- *LP & HP Heater Drains*

CCGT:

- *Feedwater*
- *Drum*

Cogeneration:

- *Process condensate return*

Expected Total Fe & Cu Levels – Different Plant Types/Optimised Chemistry

Feedwater

OT:	Total Fe =	< 1 µg/kg
AVT:	Total Fe =	< 2 µg/kg
AVT (Mixed):	Total Fe & Cu =	< 2 µg/kg
HP/LP Heater Drains:	Total Fe & Cu =	< 10 µg/kg

CCGT Evaporators/Drums

AVT/PT/CT:	Total Fe =	< 5 µg/kg

Air Cooled Condenser (ACC)

ACC Outlet:	Total Fe =	< 10 µg/kg
Post Condensate Filter:	Total Fe =	< 5 µg/kg

Cogeneration Plants

Condensate Return:	Total Fe =	< 10 µg/kg*

***Depends on cogen plant design and function**

CPS in Steam - Fossil, CCGT & Cogeneration

For all plants types:

- ***No requirement for routine sampling and analysis of corrosion products in saturated or superheated steam***

- ***Fe in steam not linked to cycle chemistry (if present this is due to exfoliation in SH/RH and alternative methodologies needed)***

- ***Cu in steam directly linked to feedwater chemistry and drum pressure***

Sampling Systems for CPS for Water Samples

Sample nozzle:

- ***Isokinetic not needed for water, location = downstream of straight section of pipe***

Sample Line:

- ***Short as possible, continuously sloping, turbulent flow/velocity, stainless steel, soft bends***

Sample Cooler:

- ***Location as close to sample point as possible, need to maintain turbulent flows***

Sample Frequency & Conditions

For most plants no requirement for frequent or continuous corrosion product sampling and analysis

1-2 weeks of corrosion product sampling every 6 months normally sufficient

Frequency should be increased during periods of major cycle chemistry changes

Unit should be at steady, high (> 80%) load for at least 2 hours prior to and during sampling (grab & ICPS)

Sample lines should be run at turbulent flow conditions for 2 hours prior to and during sampling (grab & ICPS)

Grab Sample Collection

Acid preserved clean plastic bottles required

Bottles need to be ultra low metals content plastic

Reuse of bottles should only be done if totally confident with bottle cleaning procedure

Integrated Corrosion Product Samplers (ICPS)

Filtration of sample via 0.1 to 0.45 µm filter to collect particulate Fe or Cu (digestion then analysis)

Post filter sample collected & analysed for soluble Fe or Cu

Same sample requirements as for grab samples – turbulent sample flow, stable, steady unit operation etc.

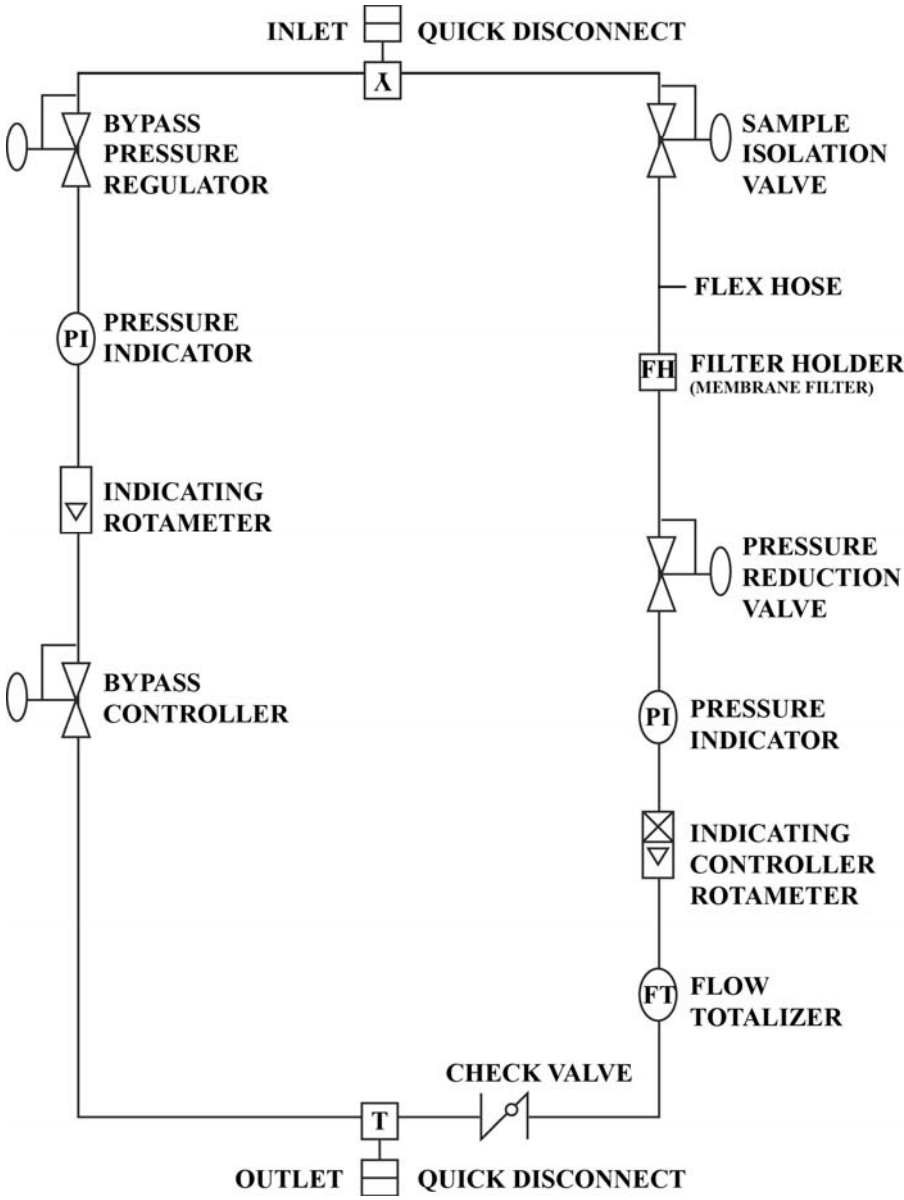

Sample Digestion

Sample digestion critical to ensure all particulates are dissolved

Requires correct use of acid / heat / time

- ***Thioglycolic at 90°C or boiling nitric acid***

ICPS filters require full digestion

Key step that is often overlooked or done incorrectly

Analytical Methods

Comprehensive tables in TGD for Fe & Cu methods

<u>Unsuitable methods</u>

- **Membrane filter comparison charts (gross overview method only) for Fe**
- **Ultraviolet–Visible (UV-Vis) spectrophotometer (Ferrozine) with a 1 cm cell (with and without digestion) for Fe**
- **Any analytical method without a digestion step**
- **Any analytical method with a Detection Limit (DL) > 2 µg/kg**

Indirect "*corrosion product*" measurement methods (turbidity/particle counters) unsuitable

Analytical Methods

Suitable methods

- Post sample digestion UV-Vis (Ferrozine) with a 5 cm cell - Fe only
- Graphite Furnace Atomic Absorption spectrometry (GF-AA) post sample digestion
- Inductively coupled plasma mass spectrometry (ICP-MS) post sample digestion

Key points are:

1. Full digestion for all samples required
2. Detection limit of < 2 µg/kg required, lower the DL the better

Validation and Quality Control

Robust quality control and validation methodologies required for corrosion product sampling program

Needs to cover all aspects – sample collection / digestion / analysis

Need complete confidence in final results

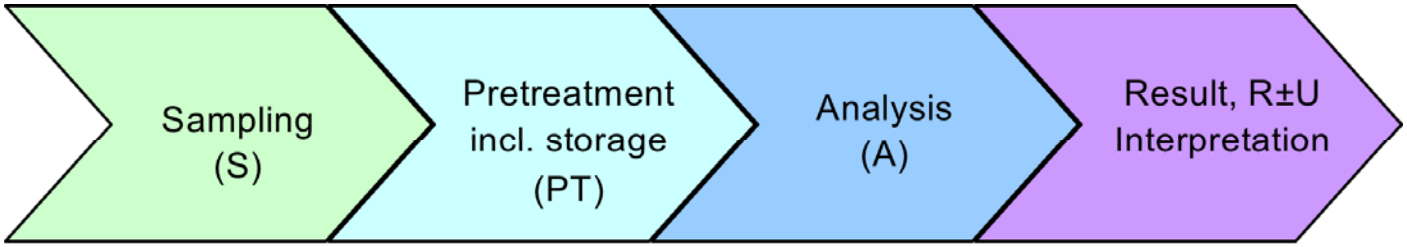

Summary

1. Sampling system design critical for CPS – turbulent flow in all aspects of system most important aspect

2. CPS of steam not required

3. CPS is a periodic activity

4. CPS should be undertaken during constant unit operating conditions rather than at a convenient time of the day

5. Most common CPS problems are a lack of sample digestion and analytical method with high DL

International Association for the Properties of Water and Steam

Monitoring and Analyzing Total Iron and Copper in Fossil and Combined Cycle Plants

David Addison, Thermal Chemistry, New Zealand;
D. Lister, University of New Brunswick, Canada; and
K. Thomsen, Vattenfall, Denmark.

ICPWS
Greenwich University
4th September 2013