KOGAN CREEK CHEMISTRY UPDATE

IAPWS / PCC GROUP MEETING

2 October 2012

CS energy

CS Energy Authors

- Katherine Rose – Chemist Kogan
- Geoff Woodgate – Senior Mechanical Engineer
- Gary Joy – Manager Chemistry

Presentation Overview

- ACC Experience:
  - Kogan Creek Power Station - ACC History Review
  - Turbine MW Degradation
  - HP Turbine Blade Deposits - Analysis
  - Corrosion Product Sampling – Deposit Collectors / Nozzles
  - Remaining Work – Expectations
- Solar Boost – chemistry aspects

CS energy

Kogan Creek – Chinchilla - Details

•Kogan Creek Power Station is the newest addition to CS Energy's diverse portfolio (December 2007).

750 MW, single shaft – super-critical - Benson Boiler – coal.

Direct Dry cooled

Oxygen treatment – S Steel LP Heaters – C Steel HP heaters

Main steam – 27.1 MPa – 546 ^{o}C

Reheat – 566 ^{o}C

Econ Inlet Temp 271 ^{o}C

2x 50% Consep Polishers - cartridge pre-filters – now ammonia cycle

Pre-service HF chemical clean
ACC Hot clean (similar to steam blows)
Rifled spiral tubes ASTM A213 T12 (1Cr½Mo)
Condenser vacuum – 20 kpa at 25C

ACC Construction

- Steam Ducts, Headers and Pipes – Mild Steel
- Condenser and Dephlegmator tubes – Mild Steel tubes, external diameter is aluminised 0.5 mm wt, elliptical tube shape, Aluminium cooling fins.
- Single tube row

CS energy

Kogan FAC – Iron Transport Issues

- Metal loss within the *ACC* condensate system
- Particulate loading on filters and polishers
- High iron in feed water prior to chemistry modifications
- Iron Deposition in the boiler / potential for deposition in turbine
- Concern regarding furnace tube creep life and potential for circumferential cracking (minor slagging)
- Need to reduce FAC in the ACC
- Need to consider a boiler chemical cleans as a preventative and management measure – post service clean Sept. 2009.
- Filter and polisher performance critical – high condensate temperatures cause polisher trip (70 C) and filter trips (80 C)

CS energy

Implemented Solutions

- Increased pH to reduce two phase FAC corrosion within the ACC and heater drains system – 9.0 to 9.5 then to 9.8
- Operate condensate polishers in ammonia cycle to allow for increased condensate pH.
- Increase polisher thermal trip set point (from 62.5° C to 70 ° C).
- Improved condensate filter performance by replacing the filter cartridges

CS energy

Kogan Creek Chemistry History

Date	pH	Average Iron before prefilters	Average iron after prefilters	Average iron after polishers	Comments
Commissioning	9.0	72ppb	35ppb	12ppb	During commissioning and early operation
June 2008	9.5	22ppb	11ppb	4ppb	Polishers changed to ammonia cycle.
October 2008 (8000hr outage)	9.5	22ppb	<1ppb	<1ppb	Prefilter elements changed to from Pall spiral wound 5µm (nominal) to Graver pleated 5µm (absolute.)
April 2009	9.8	10ppb	<1ppb	<1ppb	Current operation

Kogan Creek - Condensate Before Pre-filters Iron Monitoring

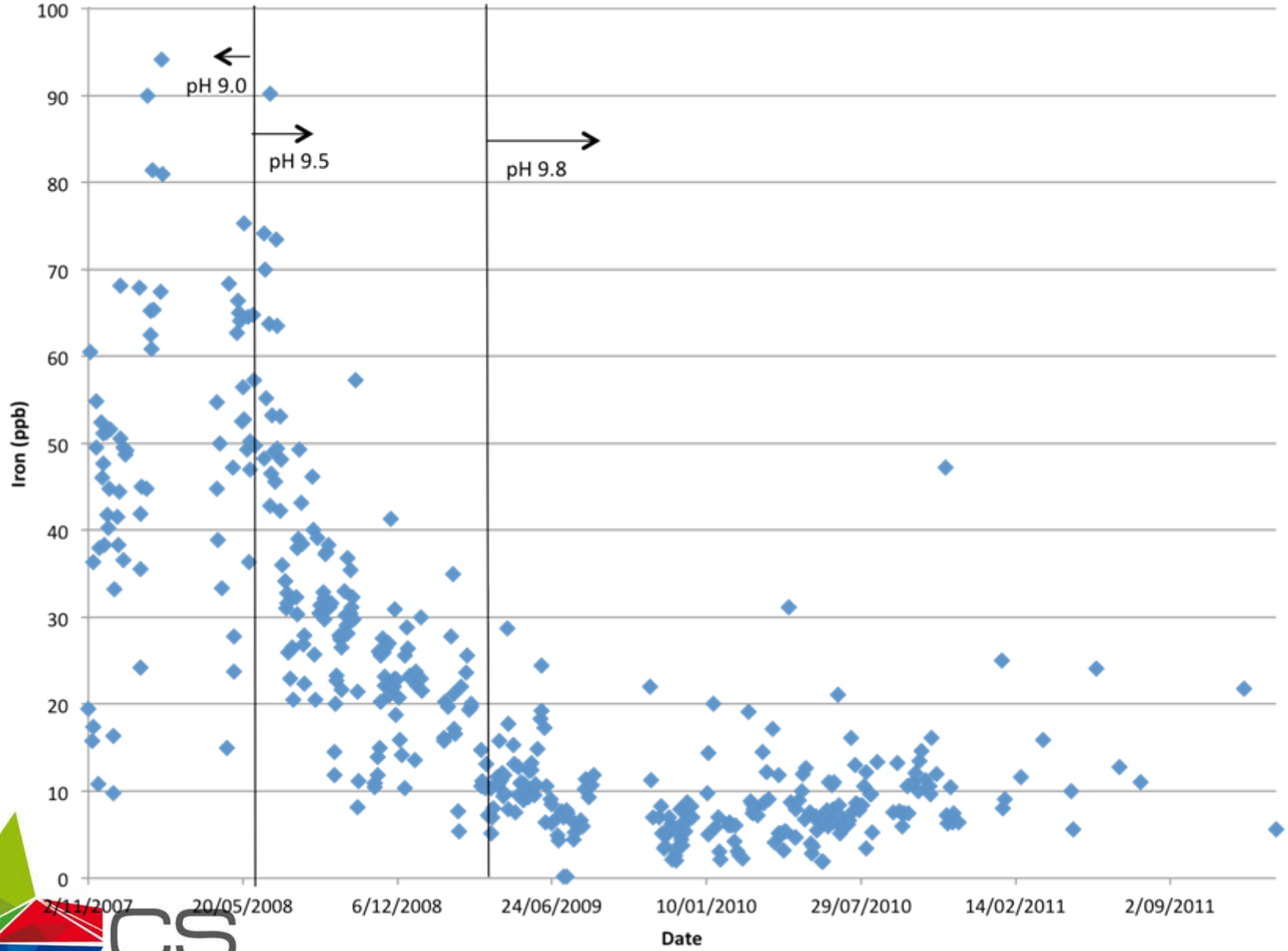

August 2011 Outage (3 ½ Years since commissioning)

2009 KOGAN CHEMICAL CLEAN DATA – noting minor Aluminium and Zinc levels

Metal	Final Clean Solution Concentration mg/L	Quantity Removed Kg of Metal
Iron	8170	817
Chromium	17	1.7
Molybdenum	10.2	1.02
Aluminium	21	2.1
Copper	<DL	-
Tin	<DL	-
Zinc	21	2.1
Suspended Solids	650	65

CS energy

Turbine Details

Turbine, Types

Four-casing condensing turbine with reheat		
Single-flow HP turbine with 17 reaction stages including 1 low reaction stage and 16 twisted drumstages		
Double-flow IP turbine: with 16 reaction stages per flow including 1 low reaction stage per flow and 15 twisted drumstages per flow		
2 Double-flow LP turbines with 6 reaction stages per flow, including 3 twisted drumstages per flow and 3 standard stages per flow		

Turbo-Generator Overview

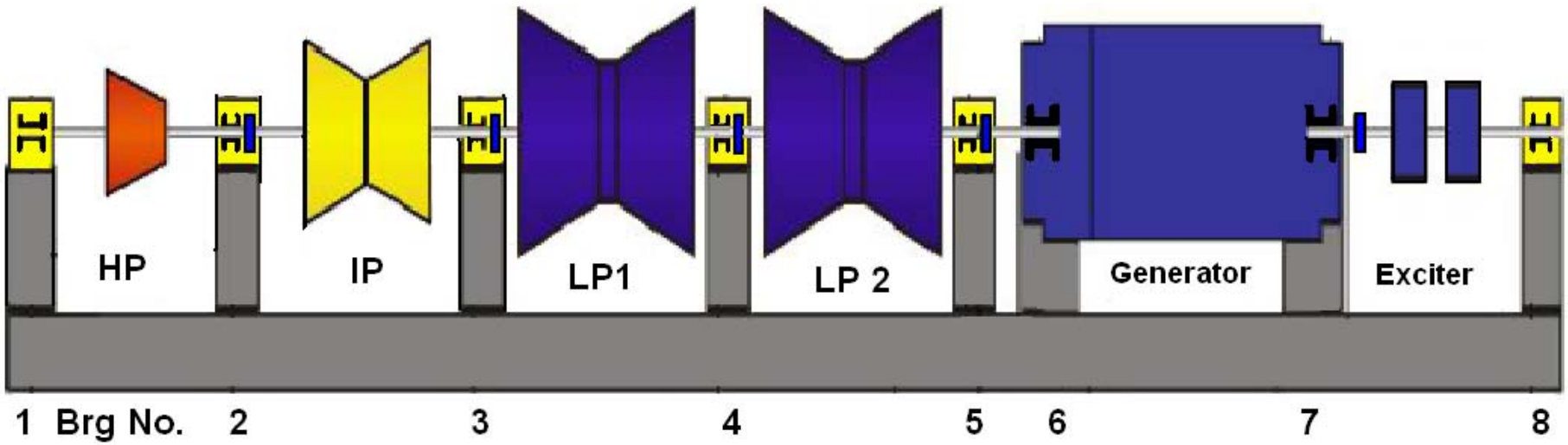

Kogan Turbine Performance Test Results

Performance Losses in Comparison with the 2010 and 2007 Tests	**Equivalent Generation Capacity Loss (MWs)**	***Likely* Recovery from HP Turbine Overhaul (MWs)**	***Optimistic* Recovery from HP Turbine Overhaul (MWs)**
HP Turbine Efficiency Degradation	3.8	1.9	2.5
HP Turbine Fouling (Likely cause for main steam mass reduction)	14.7	10	14.7
IP Turbine Efficiency Degradation	4.7	0	0
HP Turbine Valves	6.3	0	0
Unaccounted	0.3	0	0
Total	**29.8**	**11.9**	**17.2**

CS energy

HP Exhaust 2009

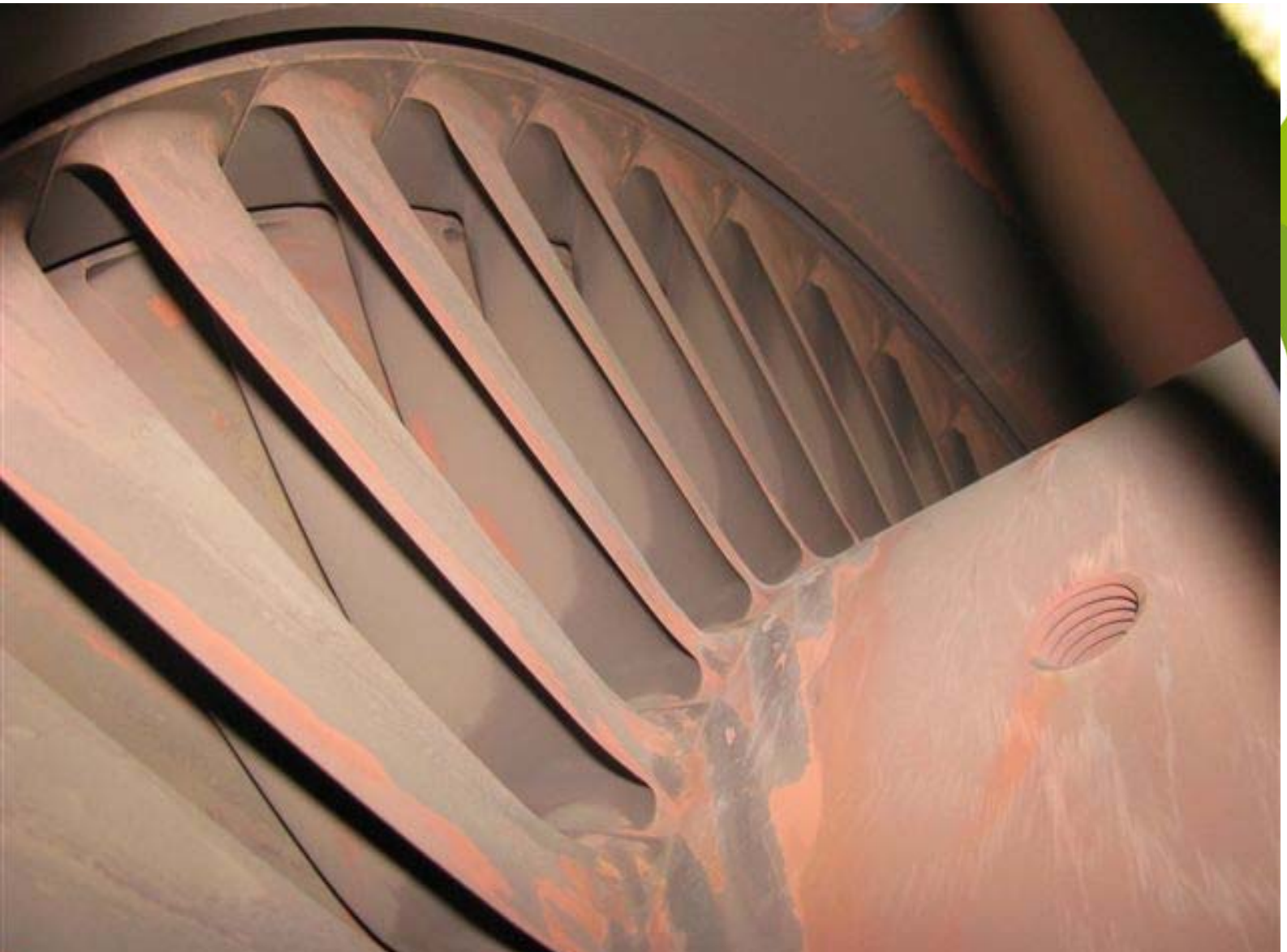

HP Exhaust - 2011

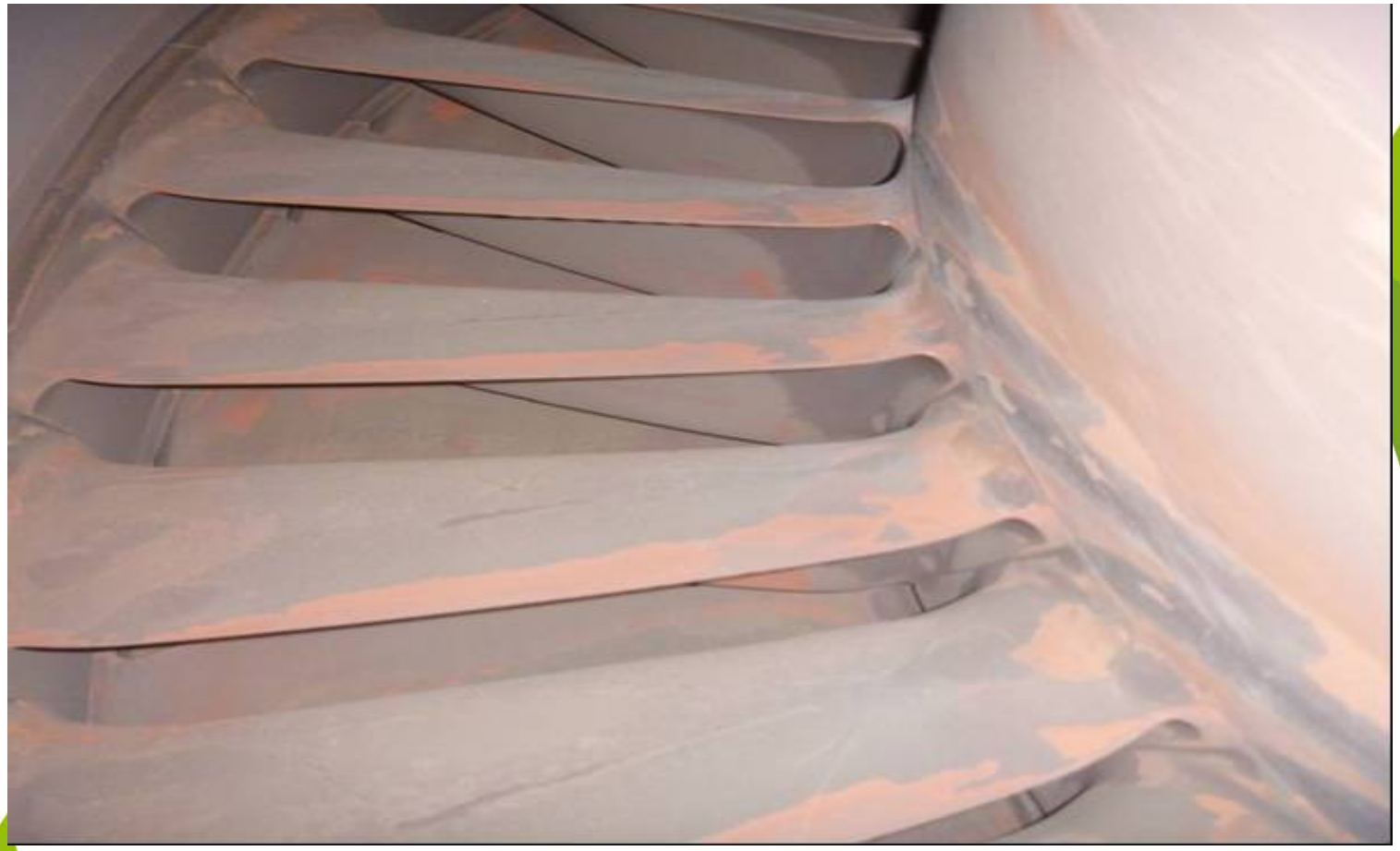

HP Turbine – 2011 – Exhaust 17

Kogan IP Turbine

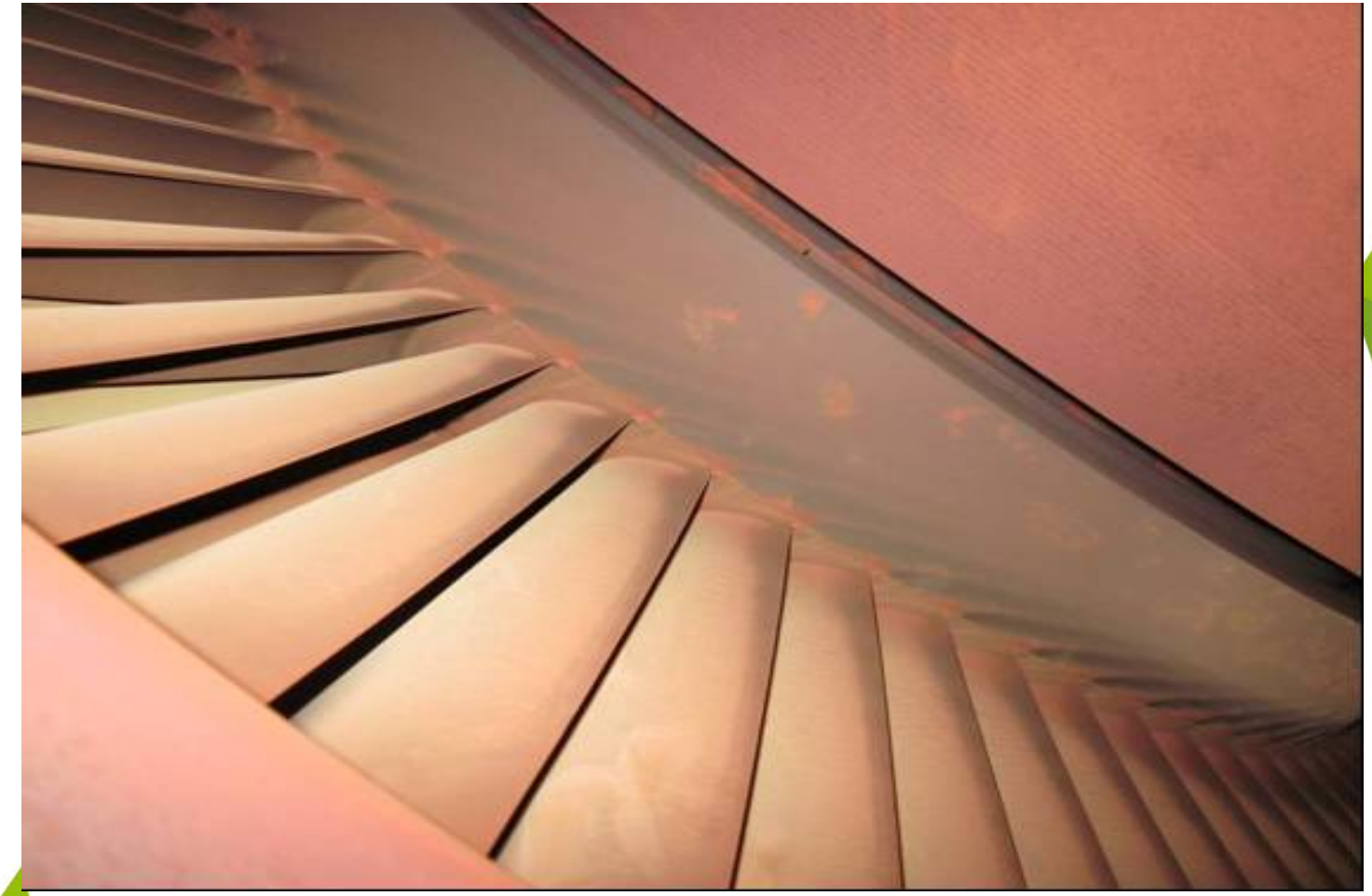

Kogan LP Exhaust

LP Turbine Exhaust Region – 2011 inspection

There is evidence of active wet steam erosion, the light grey colour on the blade leading edge continuing along the suction side of the blade. This area is relatively rough compared to the nominal blade surface.

This is erosion area has increased from the August 2009 inspection

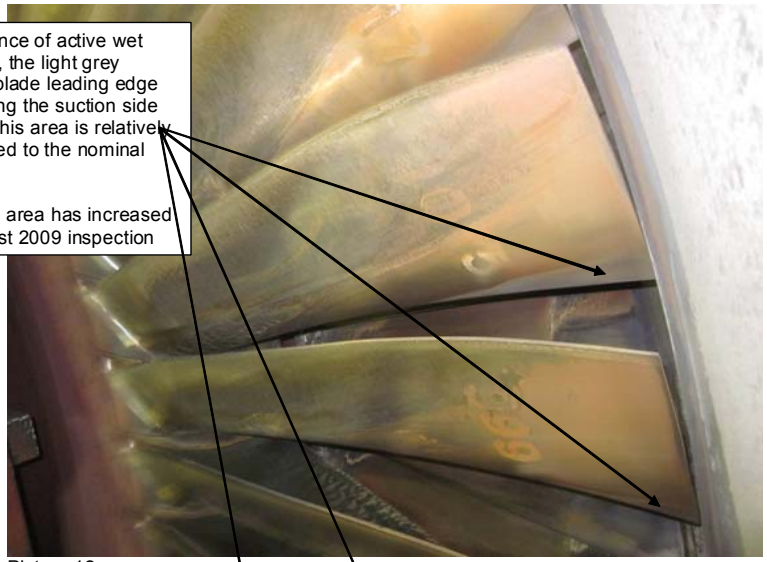

Picture 12

Picture 13

KOGAN TURBINE HP BLADE DEPOSITS - AUG 2011

Sample Location	% Fe203	%Al203	%CuO	% Cr203	% C	% CaO	%P2O5	%SO3	Total
HP Turbine Last Blade	44.17	18.58	10.37	6.19	16.7	2.14	1.17	0.69	100
Cold reheat Pipe Scan 1	90.89	2.16	1.18	3.16	2.1	0.5	-	-	100
Cold reheat Pipe Scan 2	79.06	14.8	1.24	1.66	2.69	.56			100
Cold reheat Pipe Scan 3	82.86	3.97	2.39	3.77	6.6	.39			100

Unfortunately not sufficient HP sample for XRD analysis

*Carbon – thought to be due to SEM/EDA mounting technique

Consequences

- Significant boiler tube iron deposition identified during the plant's 8000hr outage (October 2008)
- Boiler chemical clean conducted to remove deposits (August 2009)
- Deposits of Iron confirmed on last and final 3 stages of the HP turbine (August 2011) – significance? – contribution to MW loss? – significance and source of Al, Cu and Cr.
- Minor Iron deposits found at IP and LP turbine inlets or exhausts (August 2011).
- Further heat rate tests and investigations to be conducted
- Further inspections at mini overhaul 2013
- Planning for first HP cover lift – complex – costly ?

CS energy

Questions / Investigations

- What is the source of the Aluminium and copper – is it historical – is it still continuing.
- Detailed water sampling program initiated – method being developed
- Detailed metal mapping of the system undertaken – no answers from study.
- Source of the Aluminium and copper is still not clear

CS energy

Comments on SEM / EDA Results

- XRD Analysis of Cold reheat 2 sample (14.8 % Al_2O_3) : showed the presence of fine grained Al_2O_3 representative of the deposited Al_2O_3 on the HP turbine blades.

CS energy

Kogan De-aerator Al Deposit

View000

cmmclient 1/1

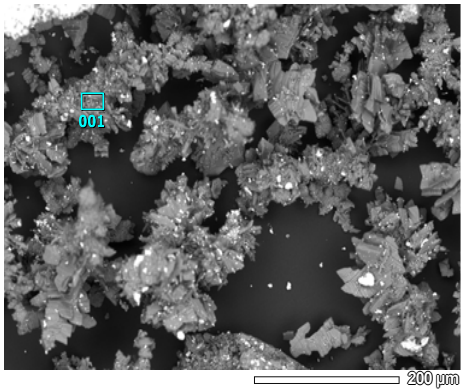

Title : IMG2

Instrument :
Volt : 15.00 kV
Mag. : x 200
Date : 2011/10/18
Pixel : 1280 x 960

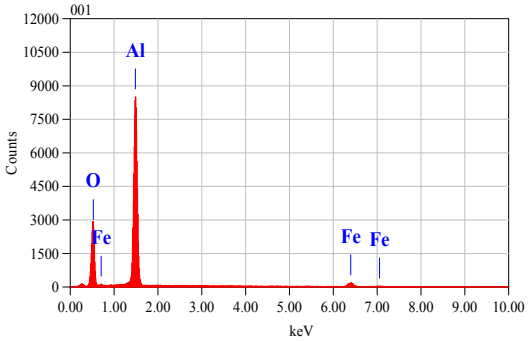

Acquisition Parameter
Instrument : 6460(LA)
Acc. Voltage : 15.0 kV
Probe Current: 1.00000 nA
PHA mode : T3
Real Time : 49.08 sec
Live Time : 39.83 sec
Dead Time : 17 %
Counting Rate: 3520 cps
Energy Range : 0 - 20 keV

ZAF Method Standardless Quantitative Analysis(Oxide)
Fitting Coefficient : 0.2062
Total Oxide : 24.0

Element	(keV)	Mass%	Error%	Mol%	Compound	Mass%	Cation	K
O *		44.87						
Al K*	1.486	46.06	0.31	91.31	Al2O3	87.02	14.61	82.3426
Fe K*	6.398	9.08	1.60	8.69	Fe2O3	12.98	1.39	17.6574
Total		100.00		100.00		100.00	16.00	

JED-2300 AnalysisStation JEOL

Current Questions

- Source of Aluminium? - only known Aluminium metal present – external surface of ACC tubes – all other possibilities also being investigated.
- Source of Copper?
- Significance of Al and Cu and turbine blade deposits? – “glue” – also incorporating Fe
- Current investigations – apparent MW loss suspected as being due in part to HP blade deposits.
- Other plant Owner’s and ACC suppliers experience

CS energy

May 2012 Sampling Program

- Method utilises Sentry sampling rig with millipore filter paper and cation exchange paper – follows ASTM Method D6301-08.
- Initial application of method – further testing required to refine the method
- Results very low - <<1ppb – suggests Al present as an insoluble form at 9.8 pH. Question of the capacity of the cation paper to collect soluble Al at pH 9.8

CS energy

May 2012 – Sampling Program – Cation Paper

- Filter papers supplied as filters collected from an iron sampling rig. Filters marked as insoluble were 0.1micron mixed cellulose filter papers. Filter papers identified as soluble were cation exchange chromatography paper.
- Method Ref: ICP/OES in accordance with APHA protocol 3030 K

CS energy

May 2012 – Sampling Results

CS Energy Kogan PS Identification	Al	Cu	Fe
Metal concentrations in original samples (in nanograms per litre)	ng/L	ng/L	ng/L
Before Polisher 1-4/5/12 Insoluble	3.3	1.4	877.3
Before Polisher 1-4/5/12 Soluble	2.6	1.4	21.7
BP 8-15/5/12 Insoluble	33.4	32.4	4375.6
BP 8-15/5/12 Soluble	4.0	0.3	10.8
BP 15-22/5/12 Insoluble	17.0	12.5	7485.0
BP 15-22/5/12 Soluble	3.7	0.3	20.6
BE 15-22/5/12 Insoluble V 2599L	1.6	0.8	30.1
BE 15-22/5/12 Soluble V 2599L	1.0	1.3	1.2
BE 22-29/5/12 Insoluble V 2510L	0.3	0.1	7.6
BE 22-29/5/12 Insoluble V 2510L	0.9	0.9	0.8

CS energy

July 2012 – Sampling – Resin Column

- Filter papers supplied as filters collected from an iron sampling rig. Filters marked as insoluble were 0.1micron mixed cellulose filter papers. Samples identified as soluble were passed through 20g of cation exchange resin and eluted with 250mL of 1+9 HCl. Method Ref: ICP/OES in accordance with APHA protocol 3030 K.
- **Results suggest Al is present in soluble form**

CS energy

July 2012 – Sampling Results

CS Energy Kogan PS Identification	Al	Cu	Fe
Metal concentrations in original samples (in nanograms per litre)	ng/L	ng/L	ng/L
Before Polisher 10-11/7/12 Insoluble	10.2	6.1	2685.0
BP 10-11/7/12 Soluble	108.7	9.4	12.0
BP 11-12/7/12 Insoluble	13.9	2.5	2731.0
P 11-12/7/12 Soluble	310.6	9.4	27.4
BP 13-17/7/12 Insoluble	3.8	3.9	3274.0
BP 13-17/7/12 Soluble	30.2	6.8	13.9
BP 19-23/7/12 Insoluble	3.7	3.1	3987.0
BP 19-23/7/12 Soluble	26.7	2.2	5.2
BP 26-30/7/12 Insoluble	4.3	4.0	5260.0
BP 26-30/7/12 Soluble	22.4	6.7	10.4

CS energy

ASME Code Case 2328-1. - 304 SS super H - SH and RH tubing

C: .07-.13

Mn: 1.00 max

Ni: 7.50 - 10.50

Cr: 17.00 - 19.00

Cu: 2.50 - 3.50

Nb: .30 - .60

N: .05 - .12

Al .003 - .030

B: .001-.010

CS energy

Materials – WB 36

C 0.10-0-17
Si 0.25-0.50
Mn 0.80-1.20
P 0.025 max
S 0.020 max
Cr 0.30 max
Ni 1.00-1.30
Cu 0.50-0.80
Mo 0.25-0.50
Nb 0.015-0.045
N 0.020 max
Al 0.015-0050

- **The CFH side feedline and the BFP Min flow system are manufactured from WB36 steel pipe which contains Cu**

CS energy

Deposit Collector – Sampling Nozzle

Collector

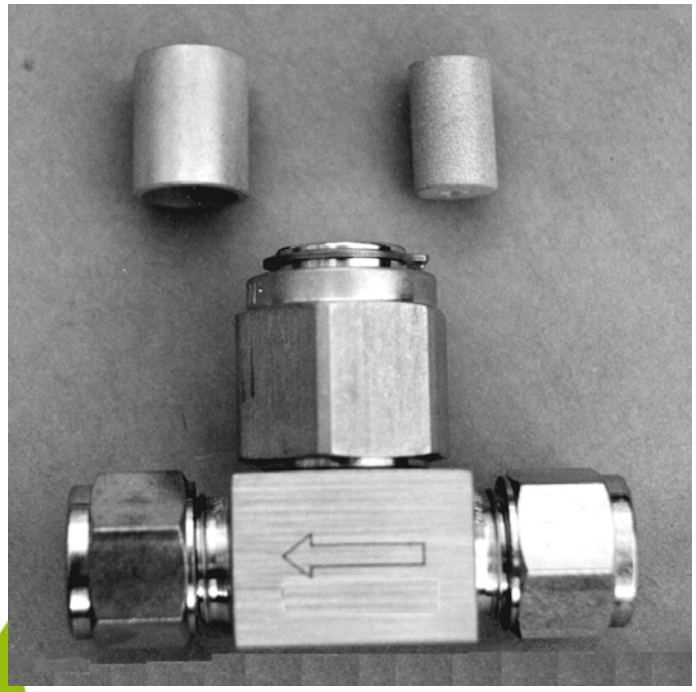

Nozzle

Deposit Collector – Sampling Nozzle

- Turbine inspection opportunities are limited and blade cleaning opportunities are very irregular.
- Hence;
  - Separate to unit cycle monitoring for Aluminium and copper levels to determining whether deposition is still occurring
  - CS Energy are also investigation the use of deposit collectors and / or converging sampling nozzles as a possible real time method to measure deposition.
- Operating experience is sought from other plant owners

CS energy

Remaining Challenges – Expectations - 1

- Other experiences with aluminium - blade deposits – SEM / XRD analysis – turbine inspections
- Support for more scientific data on the thermodynamics of Aluminium in the unit cycle – form, transport and deposition mechanisms
- Comments on sampling and analysis of FW / steam for aluminium
- Experience with turbine deposit collectors
- Comments on the effectiveness of condensate filters and polishers (ammonia and H cycle) on Aluminium removal

CS energy

Remaining Challenges – Expectations - 2

- Identification of shared interest in further R& D – IAPWS, EPRI and ACCUG.
- Identification of an aluminium limit in FW and steam for sub-critical and super-critical units – how much is too much for HP deposition.
- Comments on turbine blade cleaning methods – in-situ – cover on – cover off
- Comments on aluminium in boiler tube deposits - is it significant and what is the potential impact of chemical cleaning – does it require special cleaning consideration.

CS energy

IAPWS - Interfaces

- Properties of Aluminium in the unit cycle – soluble / insoluble – polisher / filter role - ICRN 26 - is there IAPWS support – action required
- Steam and FW limits for Aluminium – TGD Steam Purity – TGD Volatile treatment
- Sampling and analysis for Aluminium – ICRN 26 or ICRN 19

CS energy

Kogan – Solar Boost

About Solar Boost

- 44 MW solar thermal addition to the existing 750MW coal-fired Kogan Creek Power Station
- More electricity will be produced with the same amount of coal – increasing fuel efficiency and reducing greenhouse intensity
- Output will be up to 44 MW during peak solar conditions
- 44 GWh (44,000 MWh) more energy per year
  = powering an additional 5,000 homes
- Peak construction workforce of 120
- Operational by end 2013

CS energy

Official launch – 13 April 2011

Kogan Creek Solar Boost Project, step-by-step:

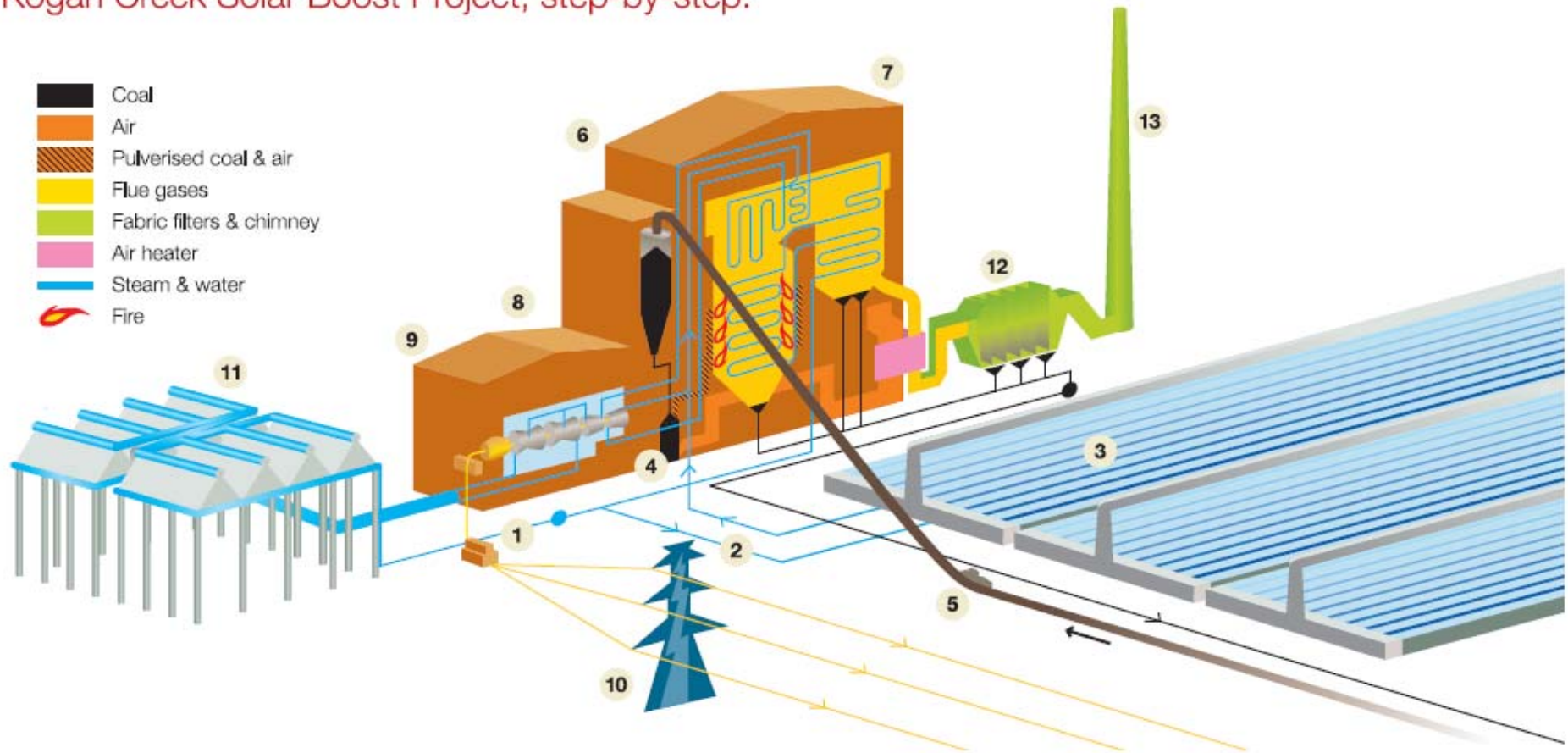

CS energy

Aerial View - Schematic

An aerial impression of where the solar boost project will be constructed at Kogan Creek Power Station.

Solar Boost Cycle

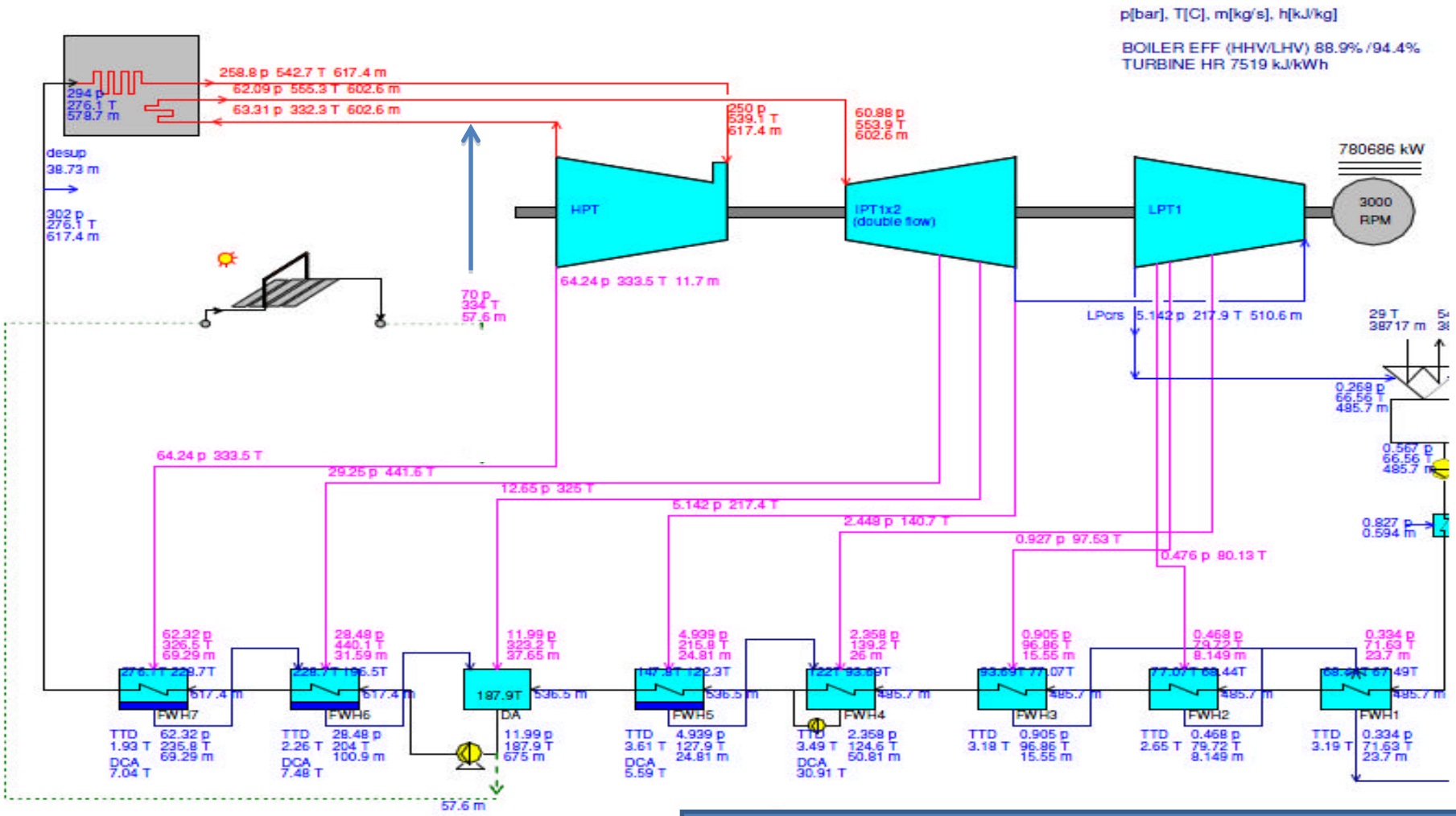

Kogan Creek Solar Boost

AREVA Solar CLFR Technology

Linear Fresnel: Light reflected and focused on common receivers

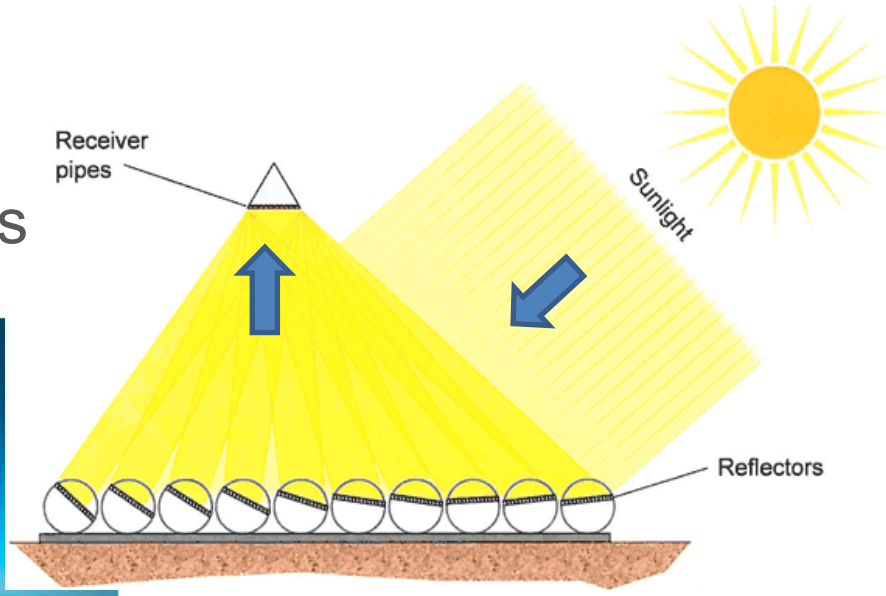

Image: Areva Solar Inc.

40x Concentration

Receiver height = 18 m
Length of receiver and mirror = 480 m
Mirror width = 2.4 m
Mirror Segment length (each) = 16 m

All measurements approximate.

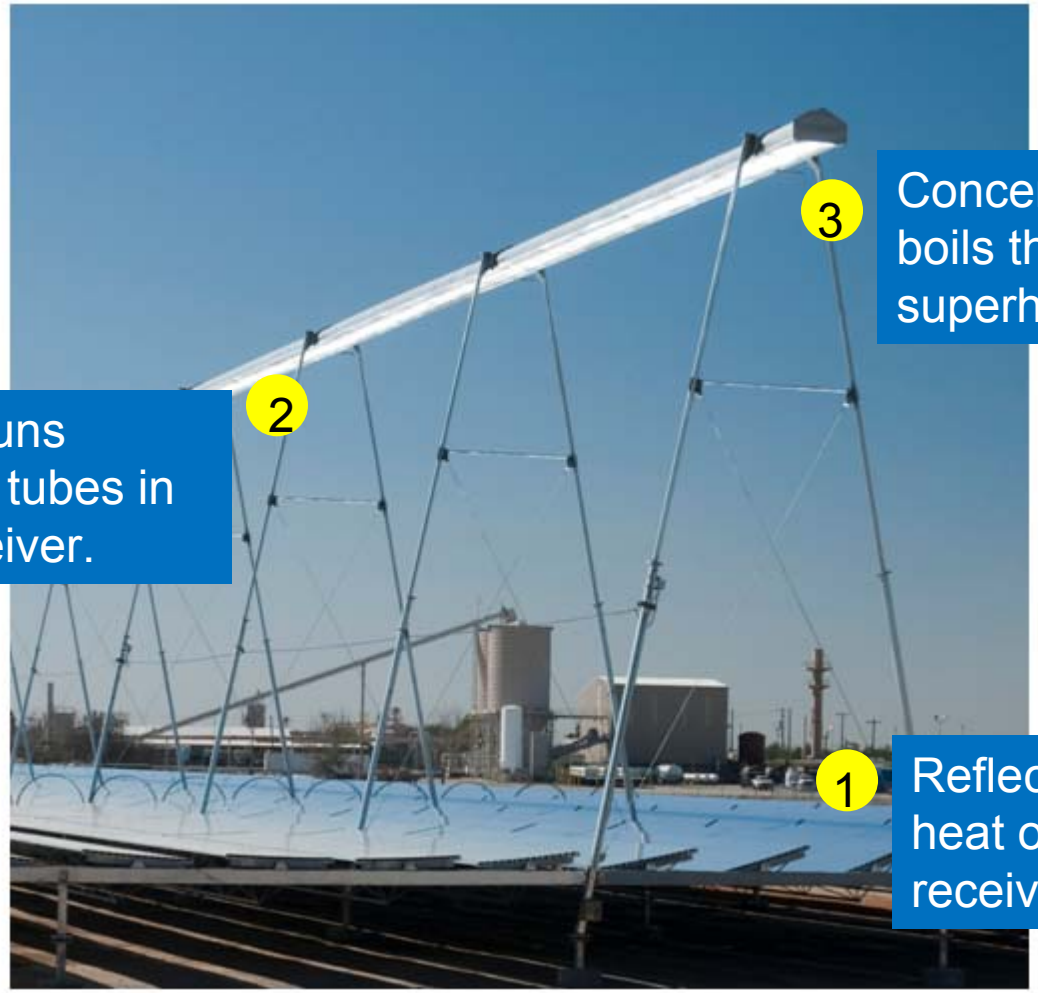

3 Concentrated sunlight boils the water, generating superheated steam.

2 Water runs through tubes in the receiver.

1 Reflectors focus the sun's heat onto an elevated receiver

CS energy

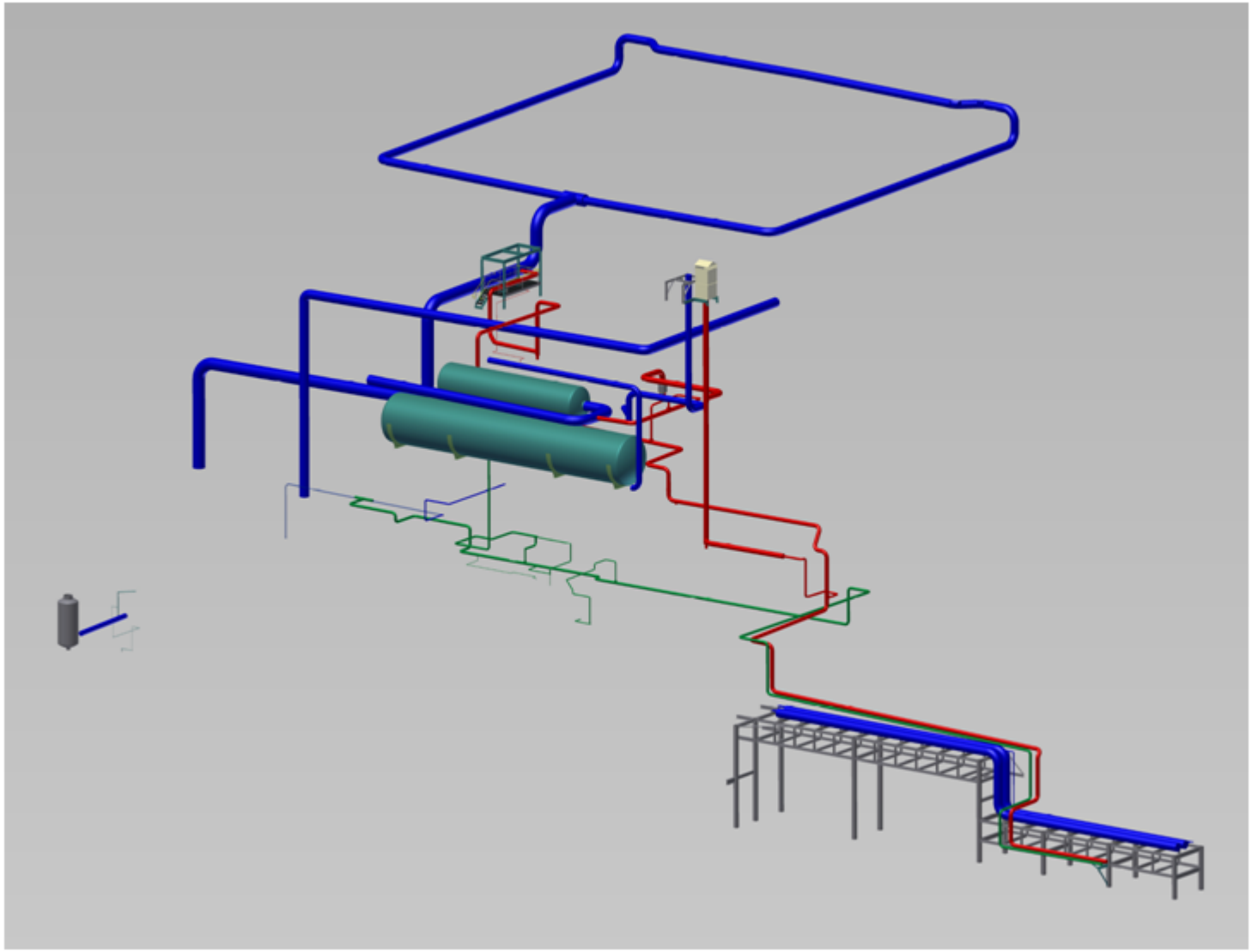

3D model of new BOP piping inside station

Chemistry Issues – Solar Boost - 1

- The following chemistry aspects have been assessed regarding the Solar Boost Project:
- A key issue is the iron contamination risk due to single and two phase FAC in the Solar Steam Generator (SSG).
- Noting that the Kogan chemistry is pH 9.8 – Oxygen Treatment – single phase risk should be controlled by OT with two phase risk reduced by high pH.
- A COMSY FAC assessment has been conducted of the SSG section – higher chromium steels are being used in the SSG.
- Design decision – At Kogan Creek SSG return is to the Cold Reheat Line – deposit risk RH and IP turbine?
- Kogan Creek will be the first plant where SSG iron levels are being monitored.

CS energy

Chemistry Issues – Solar Boost - 2

- Iron contingency management options need to be considered – iron measurement into and ex the SSG. Start up flushing options.
- Chemistry aspects of system start up and shutdown need to be considered – including the daily solar cycle.
- To avoid excess make – up water use for the daily plant cycling will need to decide short term storage / operation options including recycling of the SSG water before feed forward.
- Consider the medium and long term storage options for SSG – hot under pressure – dry air – nitrogen.
- Consider optimum chemistry regime and monitoring. Particulate monitoring.

CS energy

Solar Boost Chemical Monitoring

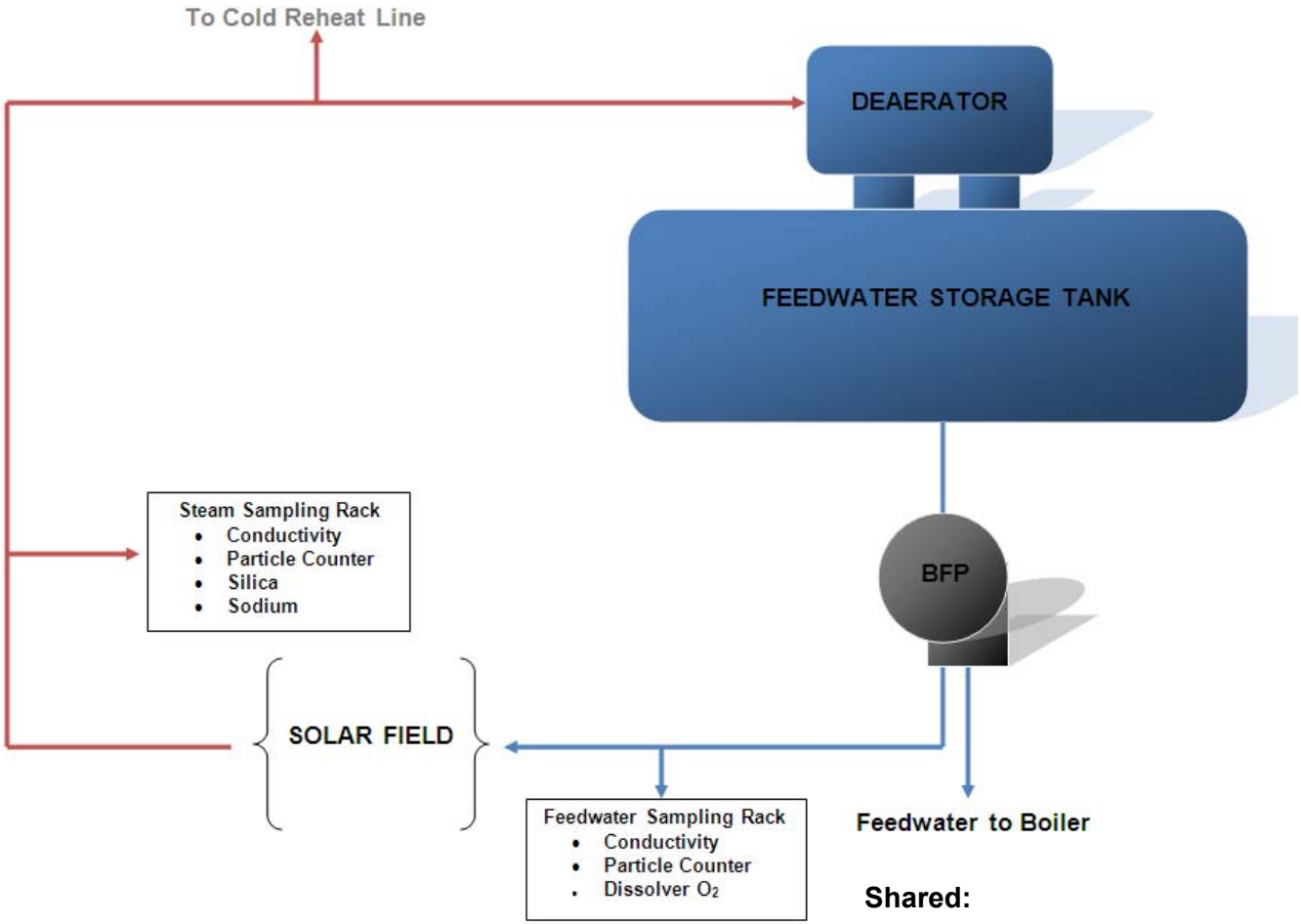

Shared:

.Silica
.Sodium

IAPWS - Interfaces

- The Solar Thermal area is developing – boost plant and stand alone 250 MW.
- Not a lot of scientific data available with respect to solar thermal generation – FAC – iron transport – shutdown conditions.
- EPRI Program area -
- Recommendation that IAPWS consider the establishment of ICRN for solar thermal generation – proposal to be submitted.

CS energy

QUESTIONS

SHARED EXPERIENCE AND COMMENTS

THANK YOU

Kogan Cycle Diagram

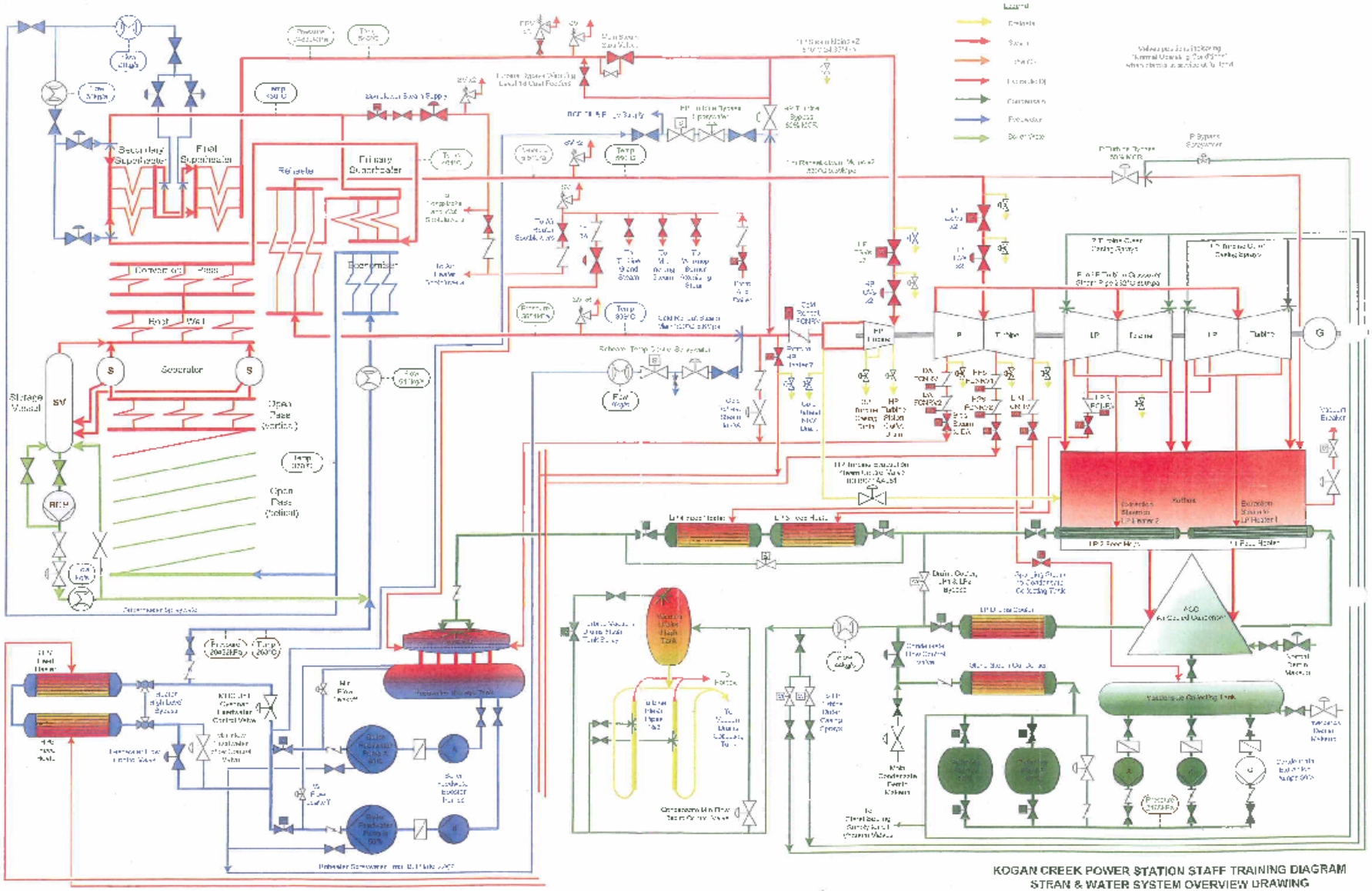

Kogan Creek - Condensate After Polisher Iron Monitoring

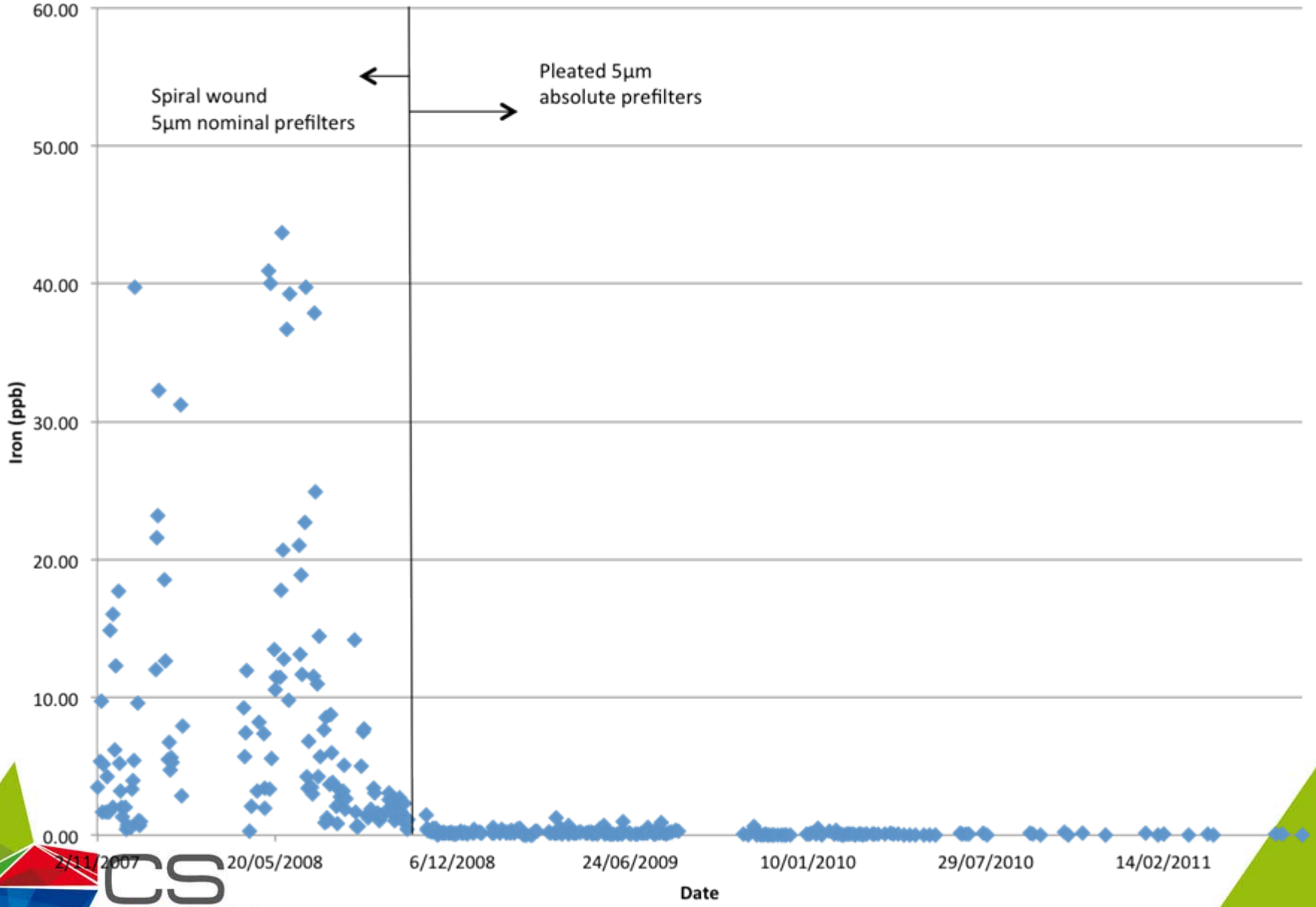

Kogan Creek - Before Economiser Iron Monitoring

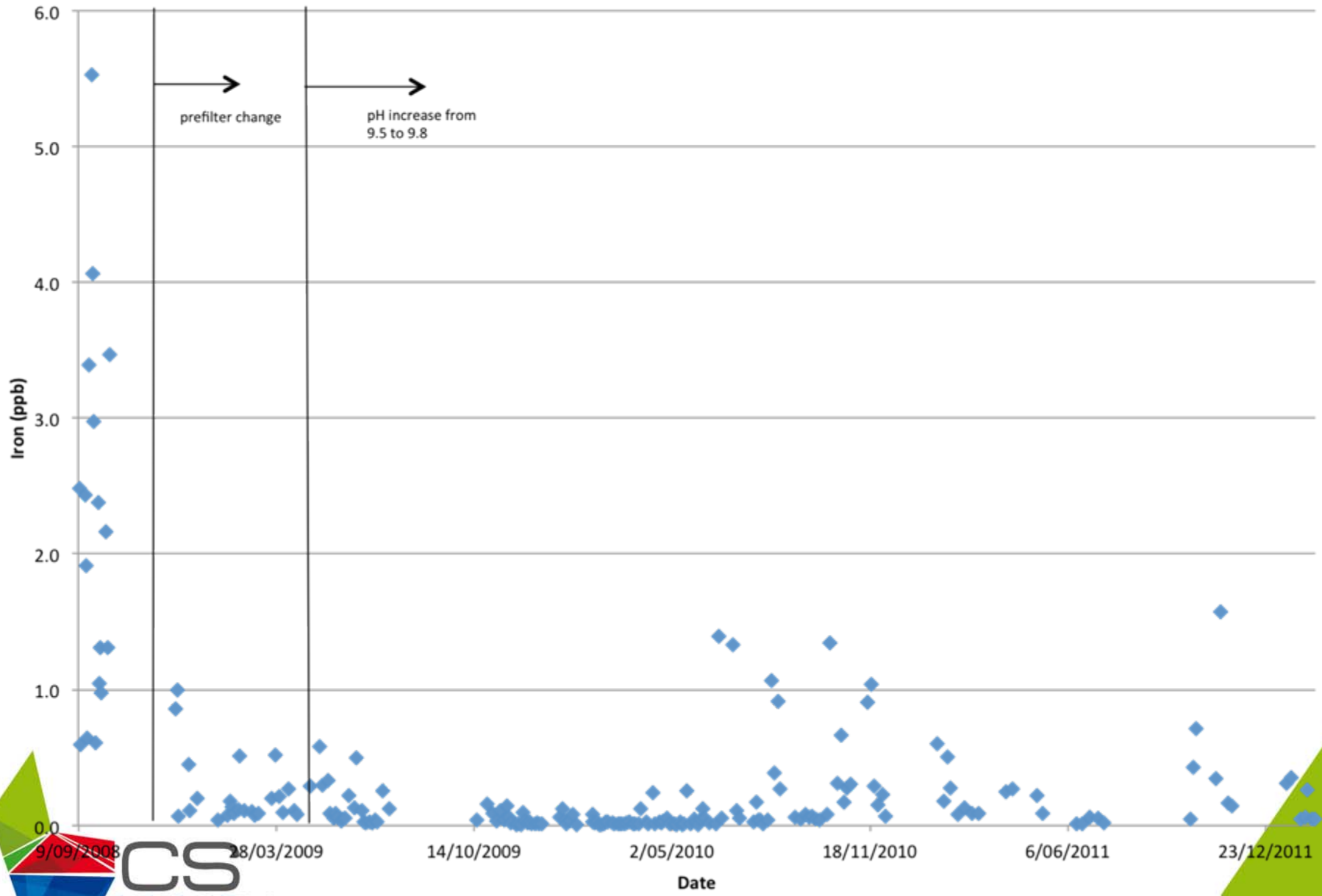

Work Scope for August 2011 Major Overhaul

- ***HP Turbine***
- Video probe inspection of the inlet region
- Video probe inspection of the exhaust region
- Visual inspection of the exhaust region[A]
- Sample the exhaust region deposits – Chemical, microscopic and physical analysis
-
- ***IP Turbine***
- Video probe inspection of the inlet region
- Video probe inspection of the exhaust region (Generator and turbine sides)
- Visual inspection of the exhaust regions[B]
- Sample the exhaust region deposits – Chemical analysis
-
- ***LP Turbine***
- Visual inspection of the inlet region[C]
- Sample the inlet region deposits – Chemical analysis
- Visual inspection of the exhaust region[D]
- Sample the exhaust region deposits – Chemical analysis

CS energy

Kogan Deaerator Deposit

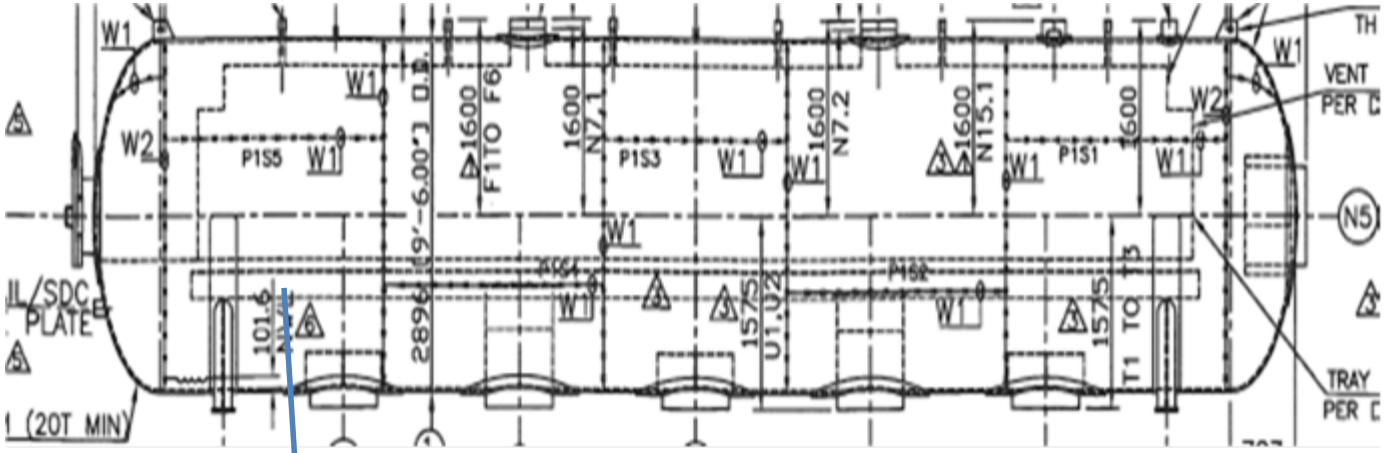

Deposit location