Improved Sampling Technique

IAPWS International Collaboration

Laboratory Experiments

*Shunsuke Uchida, **Jinbiao Xiong,
***Piti Srisukvatananan and ***Derek Lister

(*Japan Atomic Energy Agency; **University of Tokyo;
**University of New Brunswick, Canada)

Presentation at Meeting of Power Cycle Chemistry Working Group,
IAPWS Annual Meeting, Boulder, Co., USA, 2012 Sept. 30th-Oct. 5th

Background

Objective: **to optimise techniques of sampling high-temperature water/steam systems that use standard stainless-steel lines, valves and coolers.**

Method: **measure "hold up" of iron-base corrosion products in the sample line and cooler of an experimental autoclave system, simulate the heat transfer in the cooler with cfd analysis and model the hold-up using solubility data, transport equations, etc.**

Experimental autoclave system

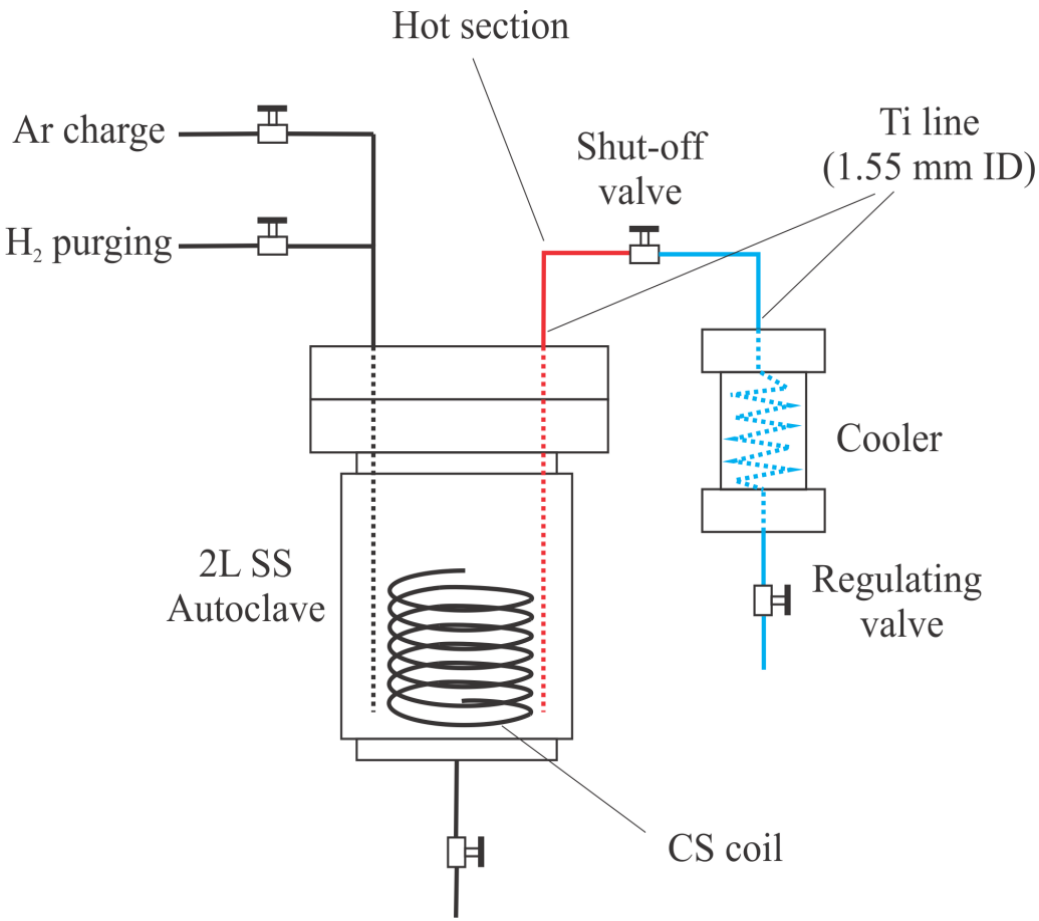

Cooling "coil" with attached thermocouples

Experimental procedure

Operate autoclave at given condition.

Take samples (flushing line each time) at different flow rates – measure (ICP-MS) dissolved iron in flushes and samples, record temperatures during sampling.

Cool down, sample autoclave contents for dissolved iron.

Leach sample line to measure deposited iron.

Phase 1 Experimental results (as in 2011 – Plsen)

Valve u/s of cooler in sample line limited sampling rate (flashing).

Temperature distributions along cooling coil obtained.

Recommended leach solution (HNO_3 + HF) attacked Ti tubing – apparent precipitated iron too high because of iron content of Ti.

No dependence of [Fe] on sampling rate.

At 300°C, $pH_{25°C}$ 7, [Fe] = 4.0 ± 1.0 ppb ($sol_{300°C}$ = 5 ppb; $sol_{15°C}$ = ~60*ppb).

At 300°C, $pH_{25°C}$ 10 (LiOH), [Fe] = 0.28 ± 0.31 ppb ($sol_{300°C}$ = 1.1 ppb; $sol_{15°C}$ = ~0.1*ppb).

extrapolation

Phase 2 Experimental results (2011-12)

Valve installed downstream of cooler.

Leach solution:– 2.4M HCl.

No dependence of [Fe] on sampling rate.

At 150°C, $pH_{25°C}$ 7, [Fe] = 1.6 ± 2.6 ppb ($sol_{150°C}$ = 112 ppb; $sol_{15°C}$ = ~60*ppb). Cooled autoclave [Fe] = 0.22 ± 0.09 ppb.

Fe leached from sample line = 18.6 µg (10.5 µg in "hot length", 8.1 µg in cooler); in total sample volume of 446.5 mL → 41.6 ppb [Fe].
N.B. $sol_{150°C}$ - *$sol_{15°C}$ = ~52 ppb.

** extrapolation*

CFD simulations with CFX code

Full 3-D model of cooling coil and shell.

Three geometric domains: tube-side process water; intervening solid (Ti tube wall); shell-side cooling (chilled) water. Each domain meshed separately.....

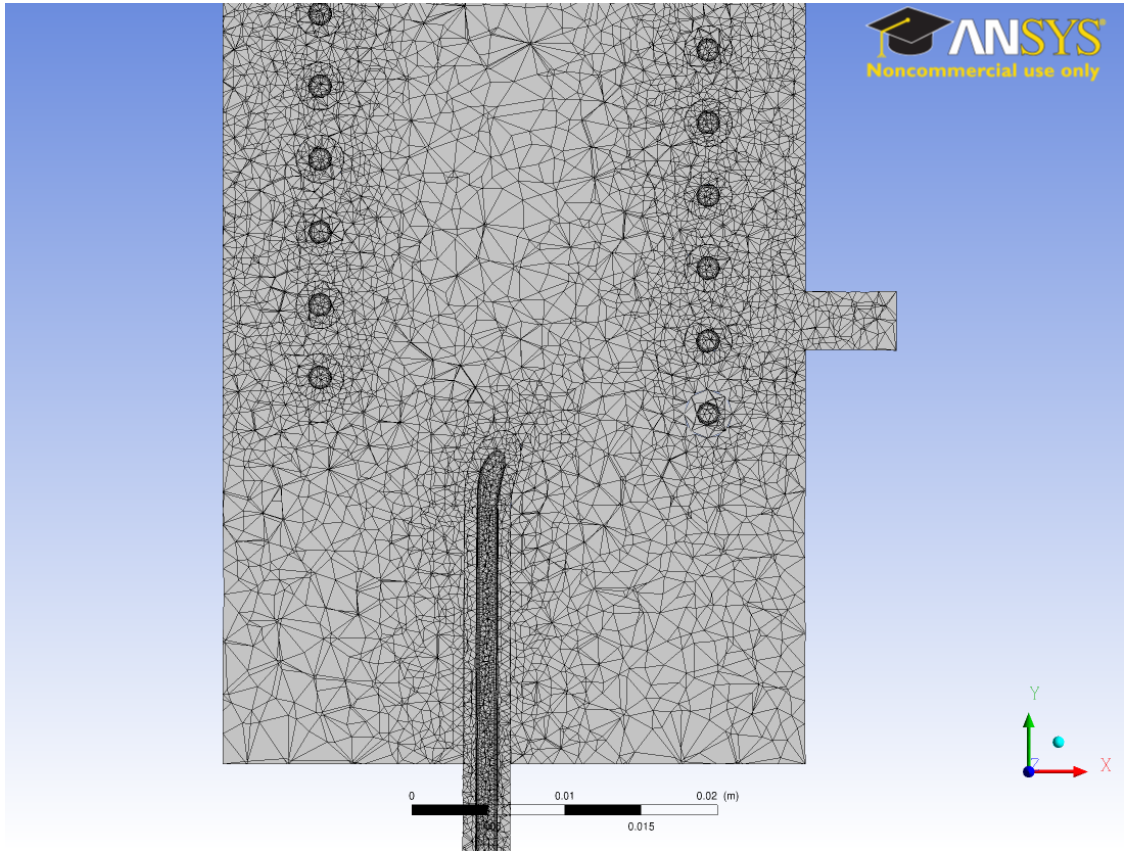

CFD simulation of cooler

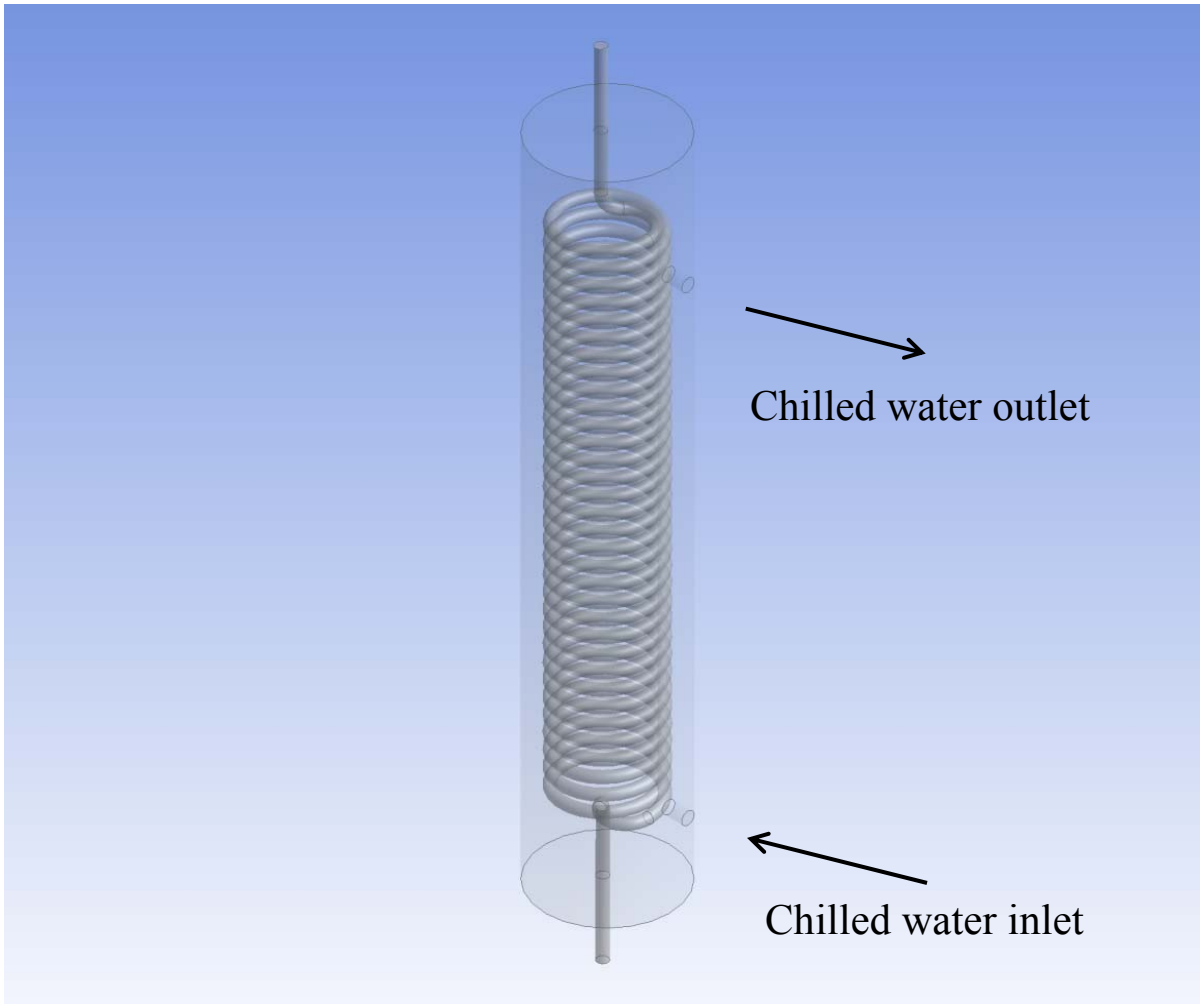

Predicted distribution of coil outer surface temperatures (steady-state)

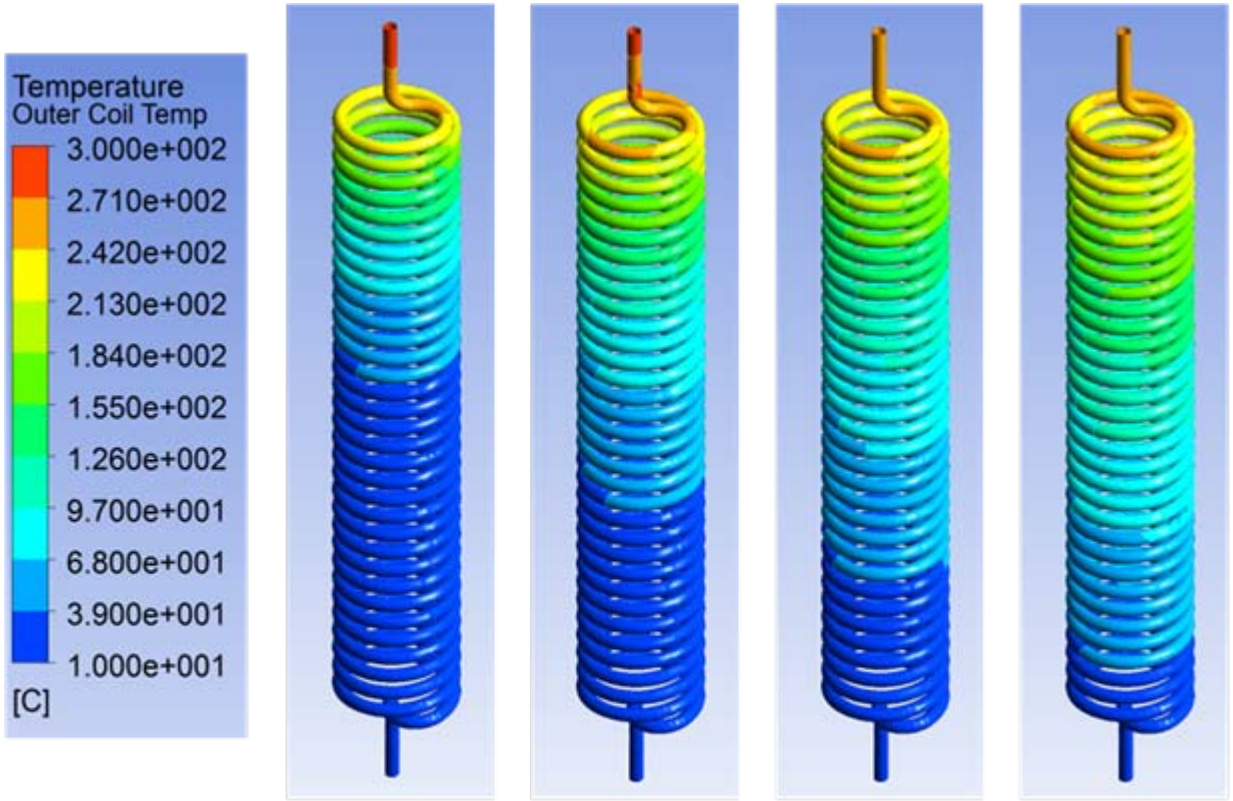

CW = 8 GPH, V_s = 0.2 m/s | CW = 12 GPH, V_s = 0.4 m/s | CW = 20 GPH, V_s = 0.7 m/s | CW = 22 GPH, V_s = 1.0 m/s

Predicted distribution of coil inner surface temperatures (steady-state)

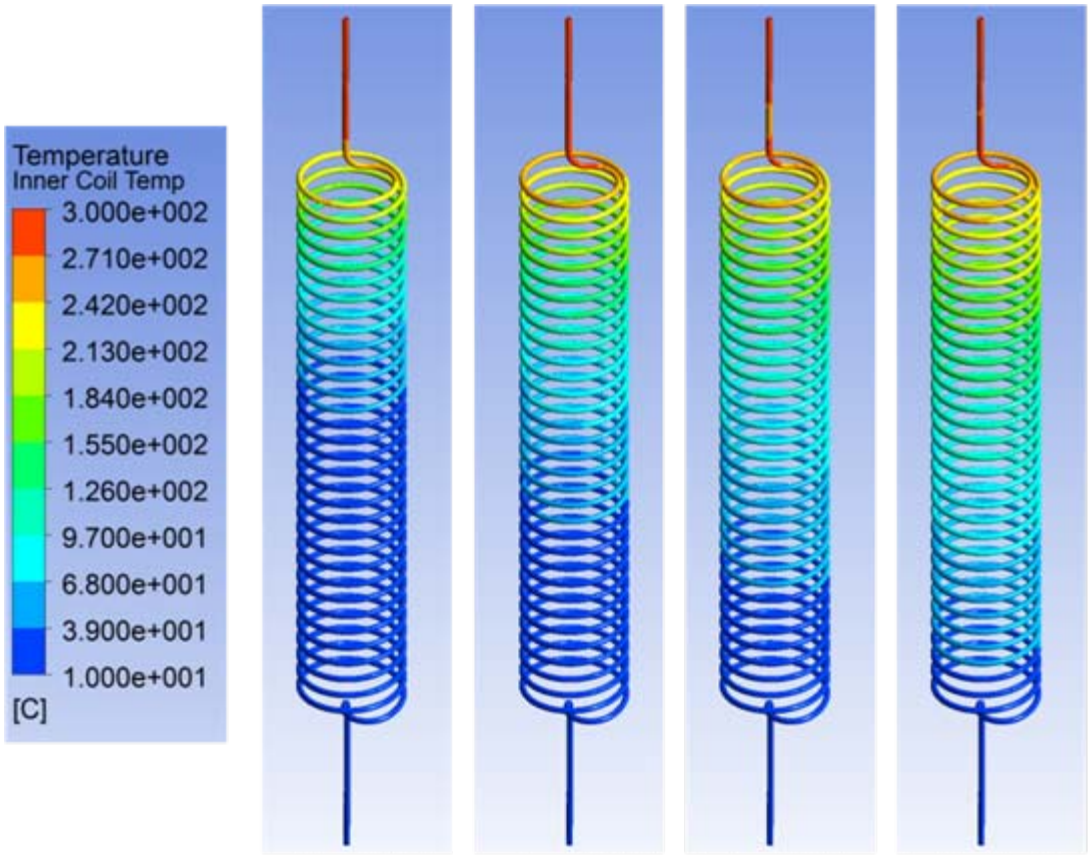

CW = 8 GPH, V_s = 0.2 m/s | CW = 12 GPH, V_s = 0.4 m/s | CW = 20 GPH, V_s = 0.7 m/s | CW = 22 GPH, V_s = 1.0 m/s

Transient simulation of coil outer-surface temperature distribution (CW = 22 USGPH, V_s = 1 m/s)

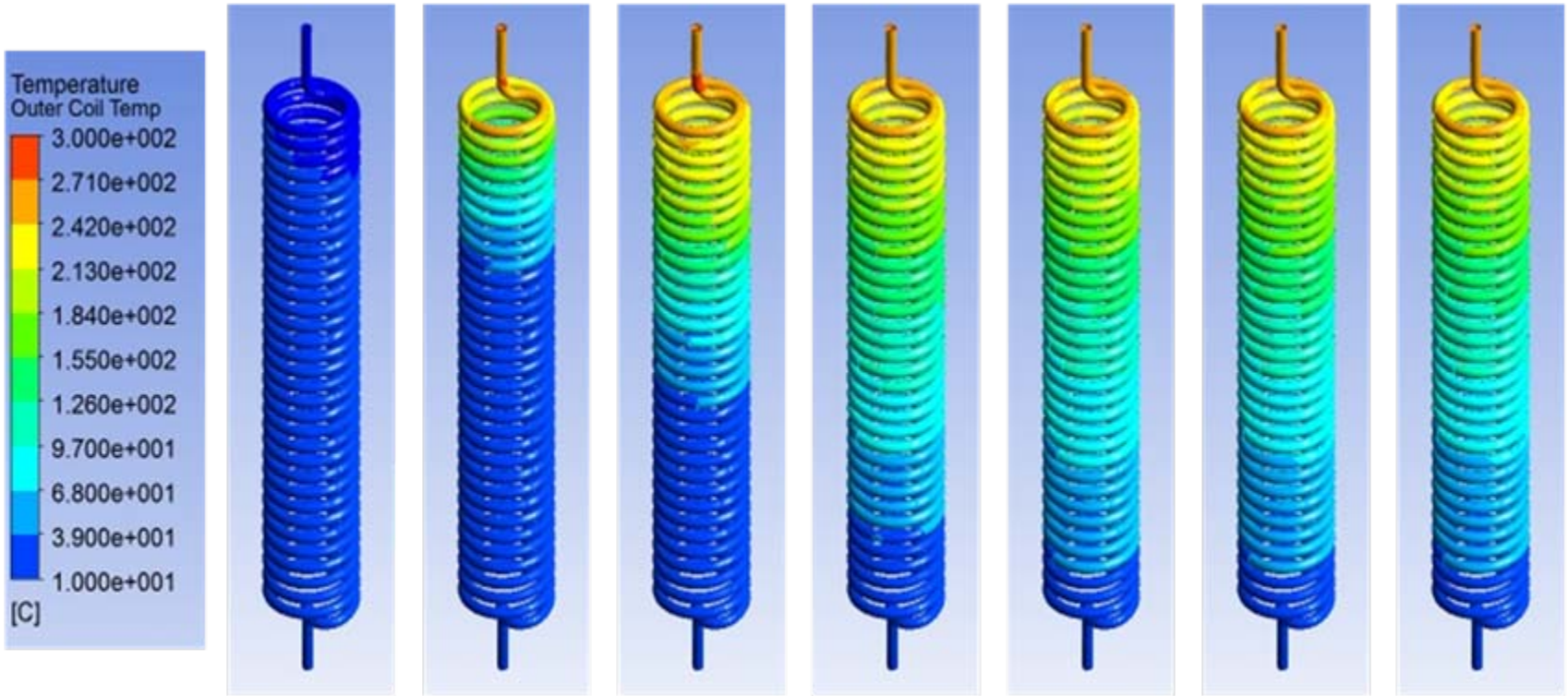

t= 0 s t= 2 s t= 5 s t= 10 s t= 16 s t= 40 s t= 180 s

Future experiments

- **Add high-temperature filter membrane to upstream end of sample line.**

- **Sample continuously to produce more representative deposits.**

Summary and conclusions

- **Deposition along sample line varies as solubility of iron;**
- **Sample concentrations independent of sampling rate.**
- **Steady-state thermal conditions attained within a fraction of a minute – depending on flows;**
- **Apparent iron concentrations less than solubility values can be obtained – particle behaviour should be considered;**
- **Modelling takes these observations into account.**