The New VGB-Guideline for Sampling Systems

Frank Udo Leidich

Boulder (CO), 04. Oct. 2012

ALSTOM

The New VGB Sampling Systems Guideline
Basics

- A working group consisting of representatives of power plant operators, power plant manufactures and analyzer providers have set-up a new VGB standard VGB-S006-2012-DE “Probenahme und Überwachung von Wasser- und Dampfkreisläufen“
- This presentation will summarize the content of this new guideline and will compare it to other national and international recommendations
- In it’s content the new guideline is unique as it contains in one document
  - information about requirements for analytical control of the water steam cycle,
  - the design and set-up of sampling systems,
  - location of sampling nozzles and their design,
  - materials recommendations for the various water and steam conditions
  - requirements for the analyzers

© ALSTOM 2012. All rights reserved. Information contained in this document is indicative only. No representation or warranty is given or should be relied on that it is complete or correct or will apply to any particular project. This will depend on the technical and commercial circumstances. It is provided without liability and is subject to change without notice. Reproduction, use or disclosure to third parties, without express written authority, is strictly prohibited.

ALSTOM

The New VGB Sampling Systems Guideline

Minimum level of key instrumentation acc. to old VGB recommendations

Location \ Parameter		DC	CC	pH	DO	NH_3	Fe	Cu	PO_4	SiO_2
Make-up water upstream mixing with condensate		X								X
Condensate at condensate pump discharge header			X							
Condensate at condensate polisher plant outlet		X								X [1])
Feedwater at economizer inlet			X		X [2])	X [3])	m	m [4])		w
Boiler water	AVT treatment		X	t - w						
	Phosphate treatment		X	t - w					w	
	Caustic treatment		X	t - w						
Steam downstream of superheaters	all boilers		X							w

DC: direct conductivitiy
CC: Cation conductivity
pH: pH-value
DO: solved oxygen
NH_3: Ammonium

Fe: Total Iron
Cu: Total copper
PO_4: Phosphate
SiO_2: Silica

X: continuously
t: daily

m monthly
w: weekly

[1]): at the end of the charging cycle
[2]): OT treatment only

[3]): via direct / cation conductivity
[4]): only if copper is present in the system

© ALSTOM 2012. All rights reserved. Information contained in this document is indicative only. No representation or warranty is given or should be relied on that it is complete or correct or will apply to any particular project. This will depend on the technical and commercial circumstances. It is provided without liability and is subject to change without notice. Reproduction, use or disclosure to third parties, without express written authority, is strictly prohibited.

ALSTOM

The New VGB Sampling Systems Guideline

Minimum level of key instrumentation acc. to EPRI recommendations

Location \ Parameter		DC	CC	pH	DO	PO_4	Na	ORP
Make-up water upstream mixing with condensate		X						
Condensate at condensate pump discharge header			X		X		X	
Condensate at condensate polisher plant outlet			O				X	
Feedwater upstream deaerator								X*)
Feedwater at economizer inlet			X		X		O	
Boiler water	AVT treatment		X	X				
	Phosphate treatment	X	X	X		X	X	
	Caustic treatment	X	X	X			X	
	Oxygenated treatment		X	X	X	X		
	Once-through			X				
Steam upstream of superheaters	all drum boilers							
Steam downstream of superheaters	all boilers		O				O	
Steam downstream of reheaters	all boilers		X				X	

DC: direct conductivitiy
CC: Cation conductivity
pH: pH-value
DO: solved oxygen
Na: Sodium

PO_4: Phosphate
ORP: Oxidation/ reduction potential
Degas: Degassed conductivity
SiO_2: Silica

X: minimum key parameter
***):** in case of AVT(R)

O: optional addtional online instruments

© ALSTOM 2012. All rights reserved. Information contained in this document is indicative only. No representation or warranty is given or should be relied on that it is complete or correct or will apply to any particular project. This will depend on the technical and commercial circumstances. It is provided without liability and is subject to change without notice. Reproduction, use or disclosure to third parties, without express written authority, is strictly prohibited.

ALSTOM

The New VGB Sampling Systems Guideline

Minimum level of key instrumentation acc. to IAPWS recommendations

Location \ Parameter		DC	CC	pH	DO	Na	PO_4	ORP	Degas	SiO_2
Make-up water upstream mixing with condensate		X								
Condensate storage tank			X							
Condensate at condensate pump discharge header		O	X	O	X	X			O*)	
Condensate at condensate polisher plant outlet		O	X			X				
Feedwater upstream deaerator					O					
Feedwater downstream deaerator					O					
Feedwater at economizer inlet		X	X	X	X			X		
Boiler water	AVT treatment	X	X	X						O
	Phosphate treatment	X	X	X		O	X			O
	Caustic treatment	X	X	X						O
	Once-through	X	X							
Steam upstream of superheaters	all drum boilers		X			X				
Steam downstream of superheaters	all boilers		X			X				
Steam downstream of reheaters	all boilers		X			X				

DC: direct conductivitiy
CC: Cation conductivity
pH: pH-value
DO: solved oxygen
Na: Sodium

PO_4: Phosphate
ORP: Oxidation/ reduction potential
Degas: Degassed conductivity
SiO_2: Silica

X: minimum key parameter

O: optional addtional online instruments

© ALSTOM 2012. All rights reserved. Information contained in this document is indicative only. No representation or warranty is given or should be relied on that it is complete or correct or will apply to any particular project. This will depend on the technical and commercial circumstances. It is provided without liability and is subject to change without notice. Reproduction, use or disclosure to third parties, without express written authority, is strictly prohibited.

ALSTOM

The New VGB Sampling Systems Guideline
Basics

The new VGB Guideline on Sampling Systems (VGB-S-006-00-2012-09) <u>shall only be used in conjunction</u> with the VGB Feedwater guideline (VGB-S-010-T-00-2011-12)

In the Feedwater Guideline

- information about the recommended sampling locations for various standard plant configurations is given
- the level of minimum key instrumentation, additional online analyzers and grab sampling for routine and extented analysis loops is recommended

© ALSTOM 2012. All rights reserved. Information contained in this document is indicative only. No representation or warranty is given or should be relied on that it is complete or correct or will apply to any particular project. This will depend on the technical and commercial circumstances. It is provided without liability and is subject to change without notice. Reproduction, use or disclosure to third parties, without express written authority, is strictly prohibited.

ALSTOM

The New VGB Sampling Systems Guideline Overview

The new VGB guideline for Sampling Systems

- Gives information where to place the sampling nozzles in the system for various standard plant configurations and chemical operation modes
- Gives information about the minimum and optional requirements for a sampling panel
- Defines the minimum standard for the probes, transmitters and their performance data used for the various chemical parameters
- Gives recommendations for the material of sampling lines, dimensions and concepts even for temperatures above 575°C (>1060 F)
- Includes description of best practice for operation, maintenance and quality management

© ALSTOM 2012. All rights reserved. Information contained in this document is indicative only. No representation or warranty is given or should be relied on that it is complete or correct or will apply to any particular project. This will depend on the technical and commercial circumstances. It is provided without liability and is subject to change without notice. Reproduction, use or disclosure to third parties, without express written authority, is strictly prohibited.

ALSTOM

The New VGB Sampling Systems Guideline
Sampling Location

New VGB recommendations recommendations for Sampling Location

Classification recommended sampling locations acc. to VGB-S-010-T-00; 2011-12

Position	Sampling point	Unit with once-through boiler	3-stage HRSG, HP once-through type	3-stage HRSG, all drum type	Unit with drum boiler, demineralised water	Unit with drum boiler, non-demineralised water
S-1.0	Make-up water	x	x	x	x	
S-1.1	Treated make-up water					x
S-2.0	Main condensate (downstream CPP)	x	x	x	x	
S-2.1	Raw condensate (upstream CPP)	x	x		x	
S-2.2	Condensate from LP-preheaters	x			x	
S-2.3	Main condensate upstream feed water tank	x			x	
S-2.4	Raw process return condensate	x	x	x	x	x
S-2.5	Rinsed process return condensate	x	x	x	x	x
S-2.6	District heater condensate	x	x	x	x	x
S-2.7	Reserve condensate tank	x	x	x	x	x
S-3.0	(HP) Feed water upstream ECO	x	x	x	x	
S-3.1	Feed water downstream de-aeration (side stream)			x		
S-3.2	IP feed water downstream feed water pumps		x	x		
S-3.3	HP feed water downstream feed water pumps		x	x		
S-3.4	Condensate from HP-preheaters	x			x	
S-3.5	Feed water downstream feed water tank					x
S-4.0	(HP) Boiler water			x	x	x
S-4.1	LP boiler water		x	x		
S-4.2	IP boiler water		x	x		
S-4.3	Boiler water downstream of flask	x	x			

Table continues on next page

© ALSTOM 2012. All rights reserved. Information contained in this document is indicative only. No representation or warranty is given or should be relied on that it is complete or correct or will apply to any particular project. This will depend on the technical and commercial circumstances. It is provided without liability and is subject to change without notice. Reproduction, use or disclosure to third parties, without express written authority, is strictly prohibited.

ALSTOM

The New VGB Sampling Systems Guideline
Sampling Location

New VGB recommendations recommendations for Sampling Location

Classification recommended sampling locations acc. to VGB-S-010-T-00; 2011-12

Position	Sampling point	Unit with once-through boiler	3-stage HRSG, HP once-through type	3-stage HRSG, all drum type	Unit with drum boiler, demineralised water	Unit with drum boiler, non-demineralised water
S-5.0	(HP) Live steam	x	x	x	x	x
S-5.1	LP saturated steam		x	x		
S-5.2	LP live steam		x	x		
S-5.3	IP saturated steam		x	x		
S-5.4	IP live steam		x	x		
S-5.5	Reheated steam	x	x	x	x	
S-5.6	(HP) saturated steam			x	x	x

© ALSTOM 2012. All rights reserved. Information contained in this document is indicative only. No representation or warranty is given or should be relied on that it is complete or correct or will apply to any particular project. This will depend on the technical and commercial circumstances. It is provided without liability and is subject to change without notice. Reproduction, use or disclosure to third parties, without express written authority, is strictly prohibited.

ALSTOM

The New VGB Sampling Systems Guideline
Key Instrumentation

Minimum level of key instrumentation acc. to New VGB Guideline

Classification level of key instrumentation acc. to VGB-S-010-T-00; 2011-12

Position	Sampling point	On-line monitors							Laboratory analyses					
		pH(1)	Specific conductivity(2)	Acidic conductivity	Degassed conductivity(3)	Oxygen	Silica(5)	Sodium(5)	Iron	Silica	Sodium	Copper(6)	Phosphate	Organics, trace anions & cations
S-1.0	Make-up water		MR		CA		MR		EA	RA				CA
S-2.0	Main condensate (downstream CPP)		MR	MO	CA	CA		MR	EA	EA	EA	RA		CA
S-2.1	Raw condensate (upstream CPP)		MO	MR				MO	RA	EA	EA	RA		
S-2.2	Condensate from LP-preheaters			CA				CA	EA					
S-2.6	District heater condensate			MR				MR(7)	EA	EA	EA			
S-3.0	(HP) Feed water upstream ECO	MR, ALS	MR(8), ALS	MR, ALS	CA	MR, ALS		MO, ALS	RA, ALS	RA, ALS	RA/EA, ALS	RA, ALS		CA
S-3.x	Feed water other sampling points			CA					EA					
S-3.4	Condensate from HP-preheaters			MO					EA					
S-3.5	Feed water downstream of feed water tank		MO	MO		CA			EA					
S-4.0	(HP) Boiler water	MR (4), ALS	MR, ALS	MR, ALS				CA	EA	RA, ALS		CA	RA, ALS	EA
S-4.3	Boilerwater downstream of flask			MR					EA		CA			CA
S-4.x	IP/LP boiler water	MO (4)	MR	MR				CA	EA	RA		CA	RA, ALS	EA

Table continues on next page

© ALSTOM 2012. All rights reserved. Information contained in this document is indicative only. No representation or warranty is given or should be relied on that it is complete or correct or will apply to any particular project. This will depend on the technical and commercial circumstances. It is provided without liability and is subject to change without notice. Reproduction, use or disclosure to third parties, without express written authority, is strictly prohibited.

ALSTOM

The New VGB Sampling Systems Guideline
Key Instrumentation

Minimum level of key instrumentation acc. to new VGB Guideline

Classification level of key instrumentation acc. to VGB-S-010-T-00; 2011-12

Position	Sampling point	On-line monitors							Laboratory analyses					
		pH(1)	Specific conductivity(2)	Acidic conductivity	Degassed conductivity(3)	Oxygen	Silica(5)	Sodium(5)	Iron	Silica	Sodium	Copper(6)	Phosphate	Organics, trace anions & cations
S-5.0	(HP) Live steam			MR, ALS	MO, ALS		MO, ALS	MR, ALS	RA, ALS	RA, ALS	RA/EA, ALS	RA, ALS		CA
S-5.x	LP/IP saturated steam with AVT			CA				CA	EA					CA
S-5.x	LP/IP saturated steam with caustic/phosphate			MO(9)				MR, ALS	EA		RA/EA ALS			CA
S-5.x	LP/IP live steam			MR				CA	EA	RA	EA	CA		CA
S-5.5	Reheated steam			MR				CA	EA	RA	EA	CA		CA

Explanation to Table 15.

	The colour marks a key parameter	MR: On-line monitor recommended MO: On-line monitor optional ALS: Action levels specified in chapter 6	The colour marks a parameter in routine analysis	RA: Routine analysis program EA: Extended analysis program CA: Campaign analysis program

(1) Instead of measuring pH, it may be calculated from the difference between direct and acid conductivity
(2) Specific conductivity may be used to control ammonia dosing and pH, thus a key parameter in this mode of operation
(3) Degassed conductivity is optional depending on plant and mode of operation. When present, this parameter is a key parameter in superheated steam for turbine operation
(4) pH calculation according (1) does not work if phosphate is added into the boiler water
(5) common analyzer for either sodium or silica operating in multiplex mode is possible
(6) only relevant with copper alloy in the condensate / feedwater system
(7) Sodium monitoring is recommended when the district heating system is operated with demineralised water conditioned with sodium hydroxide
(8) Specific conductivity may be used to control dosing of ammonia sodium hydroxide /phosphate and thus to control pH, i. e. it is a key parameter in this mode of operation, only for drum boiler
(9) Only relevant when phosphate is dosed to the boiler water

© ALSTOM 2012. All rights reserved. Information contained in this document is indicative only. No representation or warranty is given or should be relied on that it is complete or correct or will apply to any particular project. This will depend on the technical and commercial circumstances. It is provided without liability and is subject to change without notice. Reproduction, use or disclosure to third parties, without express written authority, is strictly prohibited.

ALSTOM

The New VGB Sampling Systems Guideline
Key Instrumentation

Recommeded additional instrumentation acc. to new VGB Guideline

Classification level of key instrumentation acc. to VGB-S-010-T-00; 2011-12

Position	Sampling point	On-line monitors					Laboratory analyses							
		pH	Specific conductivity	Oxygen	Silica	Sodium	Total hardness	Alkalinity	Iron	Silica	Copper[1]	Phosphate[2]	Oli, grease & organics	Additional Analyses depending on steam use
S-1.1	Treated make-up water		MR				RA	RA		RA				RA/EA
S-2.0	Main condensate		CA	CA					RA		RA		RA/EA	
S-2.4	Raw return process condensate			CA					EA		EA		RA/EA	RA/EA
S-2.5	Rinsed return process condensate		MO			CA	RA	RA	EA		EA		RA/EA	RA/EA
S-3.0	Feed water	MO ALS	CA	MR, ALS	CA		RA, ALS		RA, ALS	RA	RA, ALS		RA/EA	
S-4.0	Boiler water	MR, ALS	MR, ALS					RA, ALS		RA, ALS		RA, ALS		
S-5.0	Live steam		MR			MO, ALS								RA/EA
S-5.6	Saturated steam		MR			MO, ALS								RA/EA

Explanation to Table 16.

		The colour marks a key parameter	MR: On-line monitor recommended MO: On-line monitor optional ALS: Action levels specified in chapter 6	The colour marks a parameter in routine analysis	RA: Routine analysis program EA: Extended analysis program CA: Campaign analysis program

(1) Only relevant with copper alloy in the condensate/feed water system
(2) Only relevant when phosphate is dosed to the boiler water

© ALSTOM 2012. All rights reserved. Information contained in this document is indicative only. No representation or warranty is given or should be relied on that it is complete or correct or will apply to any particular project. This will depend on the technical and commercial circumstances. It is provided without liability and is subject to change without notice. Reproduction, use or disclosure to third parties, without express written authority, is strictly prohibited.

ALSTOM

The New VGB Sampling Systems Guideline
Sampling locations

Recommended positioning of sampling nozzle at eco inlet

Feed water at economizer inlet

A sampling station at the economizer inlet is to be installed to control the compliance with defined parameters of standards and guidelines. These measurements are mostly used as check-point for witness of the guarantee / limit values at the boiler inlet. They also serve for supervision of the high pressure preheaters in terms of corrosion behaviour and - if available - to set-up a closed control loop for the fine conditioning that are located after the feed water pumps.

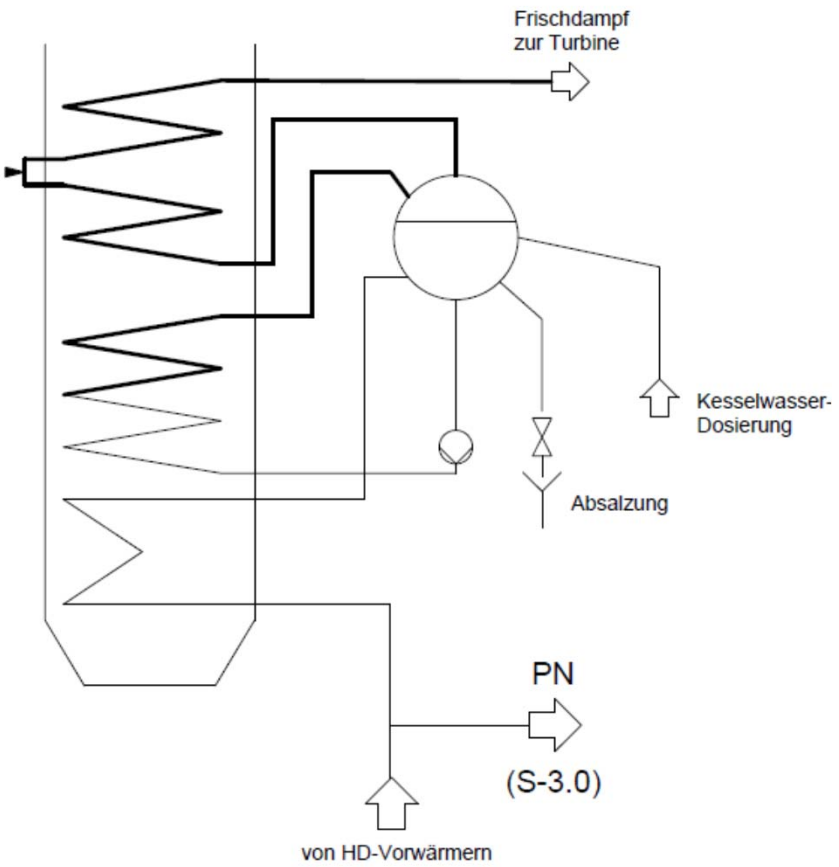

© ALSTOM 2012. All rights reserved. Information contained in this document is indicative only. No representation or warranty is given or should be relied on that it is complete or correct or will apply to any particular project. This will depend on the technical and commercial circumstances. It is provided without liability and is subject to change without notice. Reproduction, use or disclosure to third parties, without express written authority, is strictly prohibited.

ALSTOM

The New VGB Sampling Systems Guideline
Sampling Location

Recommended positioning of sampling nozzle in evaporator recirculation line

Boiler circulating water of through flow boilers

One-through boilers (Principle: Benson, Sulzer) do not consist of „boiler water“ in the classical meaning. However, a water steam mixture is formed permanently (Sulzer) and at start up and/or light load operation (Benson) at the evaporator outlet.

The water phase is removed by a separator (flask) and depending on purity recycled via pumps to the feed water located in front of eco or evaporator, linked to the condensate system or discarded if the quality is insufficient.

Therefore it is necessary to test and analyze also this water.

It is recommended to use the drain flask as sampling point. The parameters to be investigated for the two maximal allowed concentrations of contents and the optimal conditioning with chemicals are to take from the appropriate guidelines [DIN-EN 12952-12 and VGB-R 450 L].

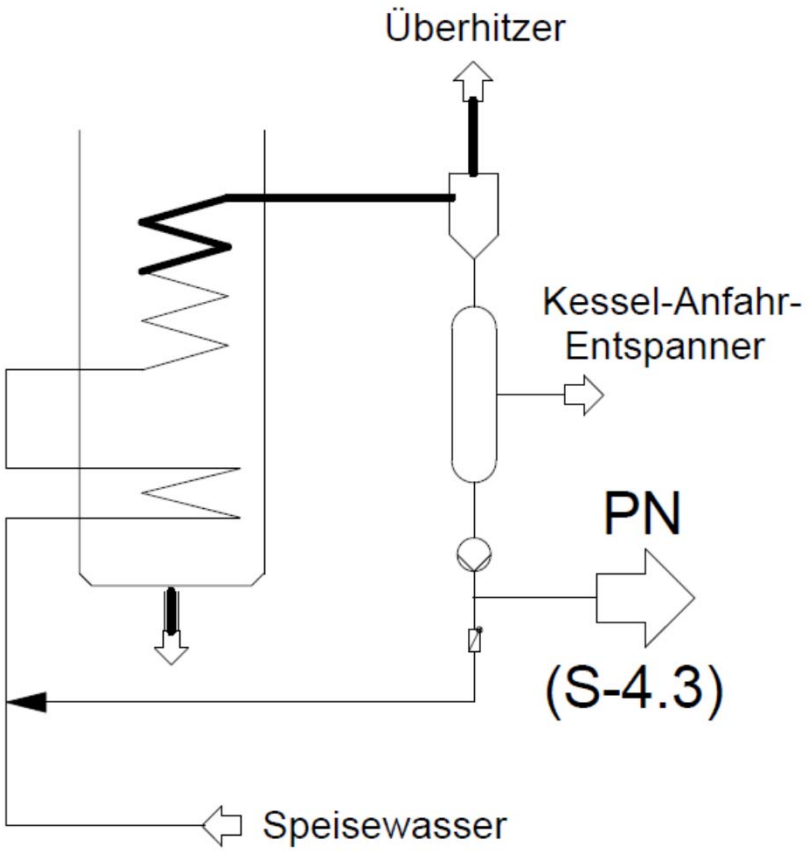

© ALSTOM 2012. All rights reserved. Information contained in this document is indicative only. No representation or warranty is given or should be relied on that it is complete or correct or will apply to any particular project. This will depend on the technical and commercial circumstances. It is provided without liability and is subject to change without notice. Reproduction, use or disclosure to third parties, without express written authority, is strictly prohibited.

ALSTOM

The New VGB Sampling Systems Guideline
Sampling pipelines

In General: The material selection for the sampling pipelines and the recommended pipeline diameters and wall thicknesses shall be in accordance with the VGB-Standard VGB-S-170-R-41-2012

- For operation temperatures up to 400°C alloy X6CrNiMoTi17 12 2 acc. to EN 10088 is recommended
- For operation temperatures above 400°C alloy X8CrNiMoNb 16 16 acc. to EN 10088 is recommended
- Operation temperatures above 575°C require:
  - A cooling section made from the same material as the main pipeline

  or
  - Use of alloy X6CrNiNbN 25 20 acc. To DMV310 or Alloy 617

© ALSTOM 2012. All rights reserved. Information contained in this document is indicative only. No representation or warranty is given or should be relied on that it is complete or correct or will apply to any particular project. This will depend on the technical and commercial circumstances. It is provided without liability and is subject to change without notice. Reproduction, use or disclosure to third parties, without express written authority, is strictly prohibited.

ALSTOM

The New VGB Sampling Systems Guideline
Nozzle

Design of the sampling nozzle

The preferred design of the sampling nozzle into the main pipe is the weld-in design as shown here.
The penetration depth into the main pipe should have 10 mm.
A beveling of the opening of the sampling nozzle against the flow direction does not improve the sample quality and is therefore not necessary.
The assembly of the sampling sensor on the tube diameter can be aligned in vertical and horizontal lines as well.
But for sampling sensors in horizontal tube lines limitations have to be considered (see below)

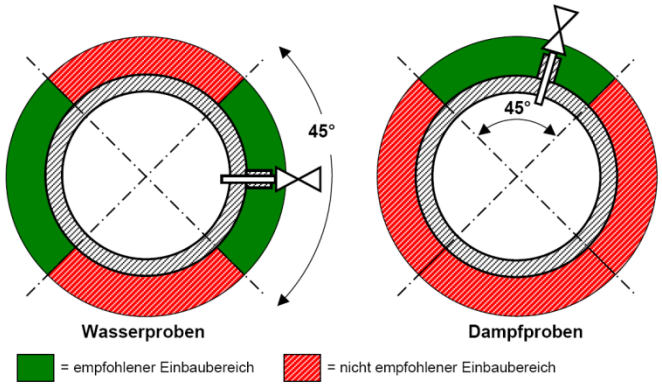

Bild 4-2 - Empfohlene Lagen von Probenahmesonden in horizontalen Hauptleitungen

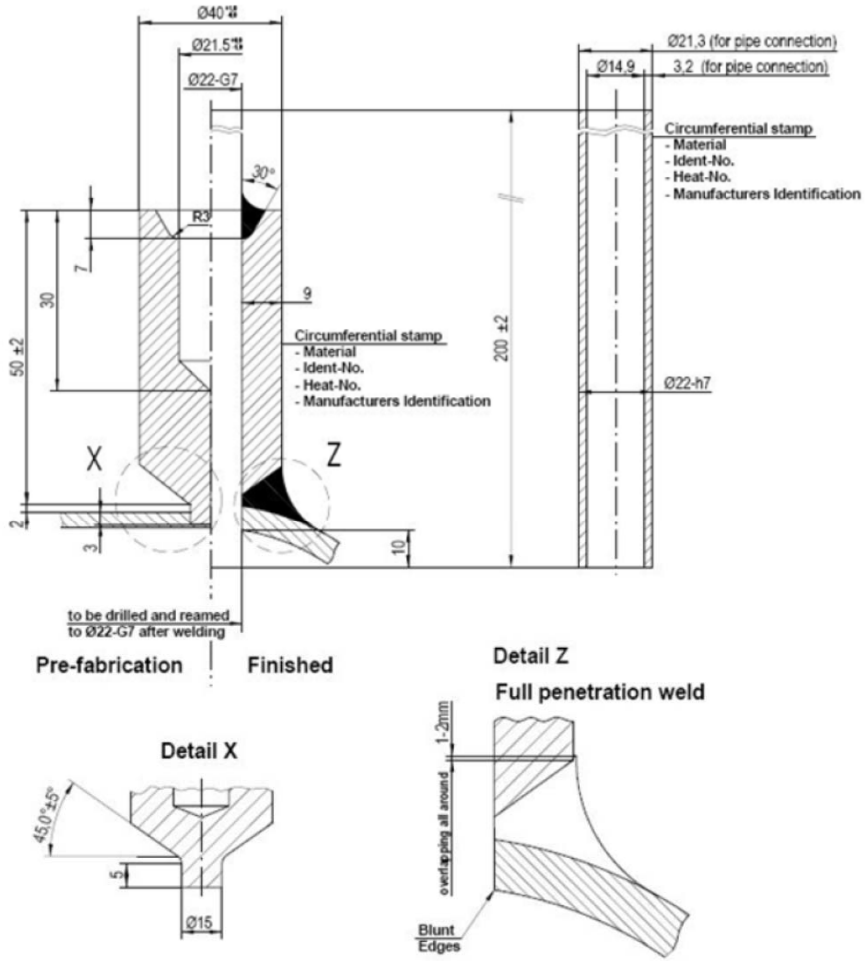

Bild 4-1 Beispiel Probenahmesonde in Hauptleitung eingeschweisst

© ALSTOM 2012. All rights reserved. Information contained in this document is indicative only. No representation or warranty is given or should be relied on that it is complete or correct or will apply to any particular project. This will depend on the technical and commercial circumstances. It is provided without liability and is subject to change without notice. Reproduction, use or disclosure to third parties, without express written authority, is strictly prohibited.

ALSTOM

The New VGB Sampling Systems Guideline
Sampling Panel

Minimum equipment of sampling Panel acc. to VGB recommendations

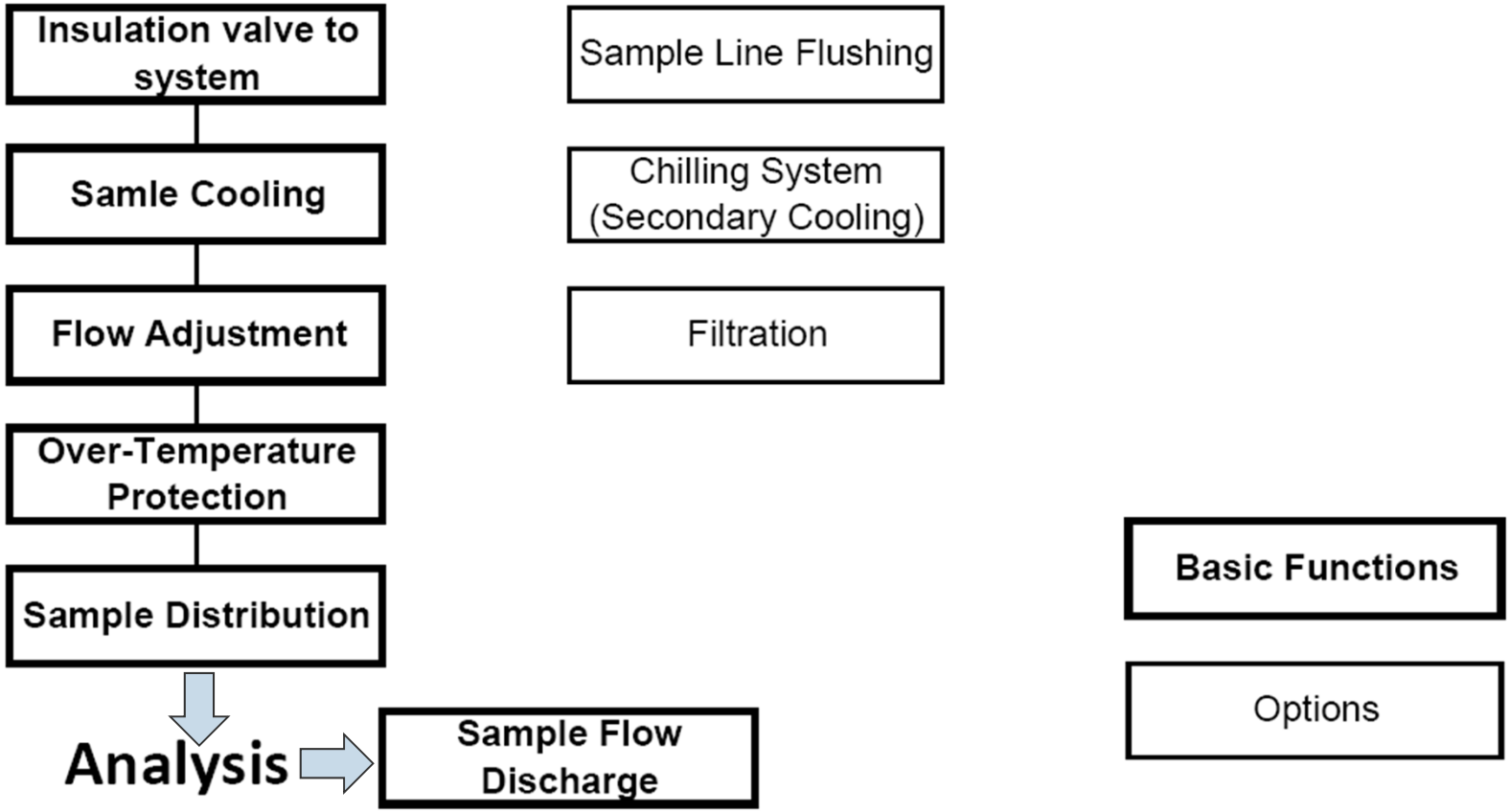

© ALSTOM 2012. All rights reserved. Information contained in this document is indicative only. No representation or warranty is given or should be relied on that it is complete or correct or will apply to any particular project. This will depend on the technical and commercial circumstances. It is provided without liability and is subject to change without notice. Reproduction, use or disclosure to third parties, without express written authority, is strictly prohibited.

ALSTOM

The New VGB Sampling Systems Guideline
Sampling Panel

Minimum level of key instrumentation

Cooler station with blow out pipes and electronical temperature control with automated shut down for over-temp.

© ALSTOM 2012. All rights reserved. Information contained in this document is indicative only. No representation or warranty is given or should be relied on that it is complete or correct or will apply to any particular project. This will depend on the technical and commercial circumstances. It is provided without liability and is subject to change without notice. Reproduction, use or disclosure to third parties, without express written authority, is strictly prohibited.

ALSTOM

The New VGB Sampling Systems Guideline
Analyzers

Set up of degas conductivity meters following different priciples

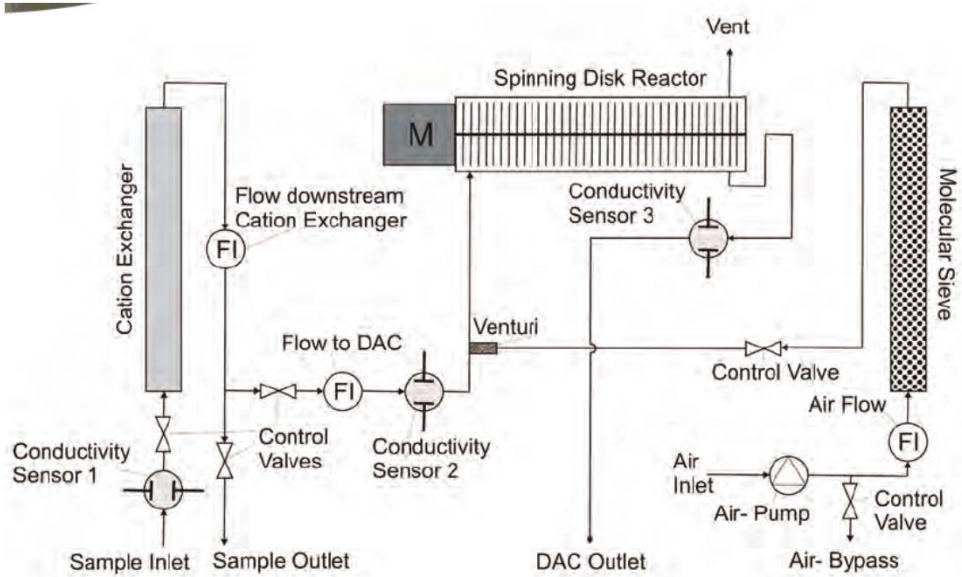

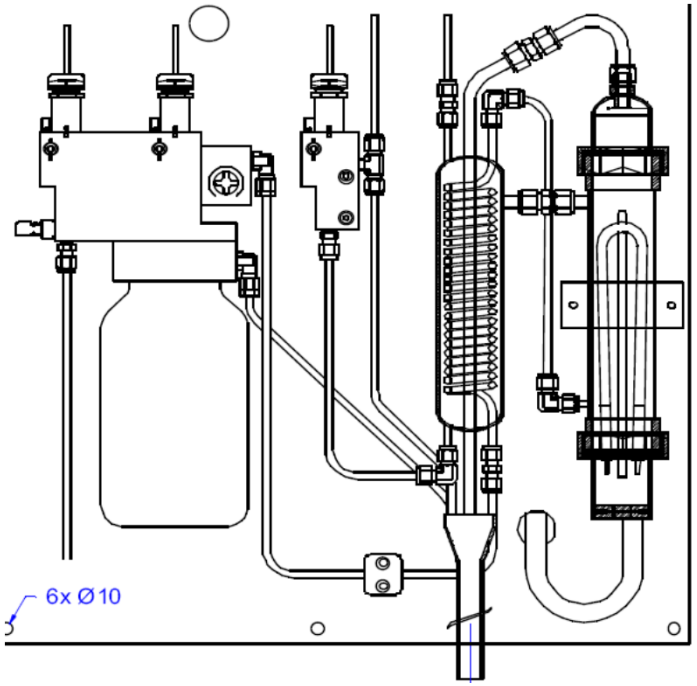

<u>Received measured data:</u>

direct conductivity, conductivity after cation exchanger, conductivity after CO_2 removal (Degasification-conductivity) and pH value (calculated) and CO_2 content (calculated)

© ALSTOM 2012. All rights reserved. Information contained in this document is indicative only. No representation or warranty is given or should be relied on that it is complete or correct or will apply to any particular project. This will depend on the technical and commercial circumstances. It is provided without liability and is subject to change without notice. Reproduction, use or disclosure to third parties, without express written authority, is strictly prohibited.

ALSTOM

The New VGB Sampling Systems Guideline
Analyzers

Minimum level of key instrumentation

Lab data for acid conductivity with thermal degasification

Set up:
Sample: carbonated, pH 9.8, 10 l/h; resin volume: 1 liter; degasser: 99.3 °C

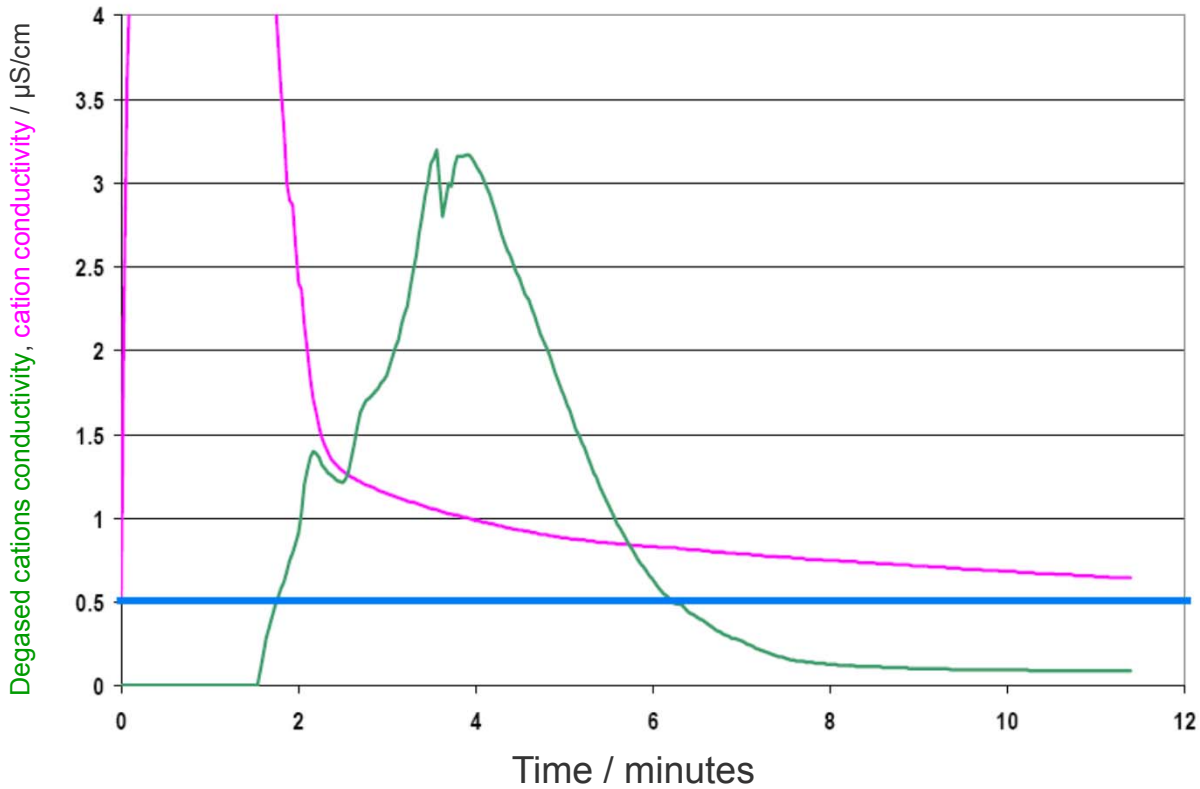

© ALSTOM 2012. All rights reserved. Information contained in this document is indicative only. No representation or warranty is given or should be relied on that it is complete or correct or will apply to any particular project. This will depend on the technical and commercial circumstances. It is provided without liability and is subject to change without notice. Reproduction, use or disclosure to third parties, without express written authority, is strictly prohibited.

ALSTOM

The New VGB Sampling Systems Guideline Summary

Outline

- A work group consisting of representatives of power plant operators, power plant manufactures and analyzer providers worked currently on the VGB standard VGB-S006-2012-DE "Probenahme und Überwachung von Wasser-und Dampfkreisläufen"

- Key aspects were:
  - Positioning of sampling stations and recommended design
  - Demands regarding functions and design of sampling control systems
  - Operation / maintenance of sampling stations

- The new standard is closely connected to the VGB feed water guideline
- This Standard is most likely available in the second half of 2012

© ALSTOM 2012. All rights reserved. Information contained in this document is indicative only. No representation or warranty is given or should be relied on that it is complete or correct or will apply to any particular project. This will depend on the technical and commercial circumstances. It is provided without liability and is subject to change without notice. Reproduction, use or disclosure to third parties, without express written authority, is strictly prohibited.

ALSTOM

The New VGB Sampling Systems Guideline
The Working Group

Contributors of the standard :

e·on

VGB POWERTECH

LINZ AG STROM

VATTENFALL

EnBW

VORWEG GEHEN

HYDRO-ENGINEERING

FDBR
Fachverband Dampfkessel-, Behälter- und Rohrleitungsbau e.V.

Fortum

Dr. Thiedig

wösthoff

swan ANALYTICAL INSTRUMENTS

HACH LANGE
UNITED FOR WATER QUALITY

Knick

Endress+Hauser

HITACHI
Inspire the Next

SIEMENS

ALSTOM

© ALSTOM 2012. All rights reserved. Information contained in this document is indicative only. No representation or warranty is given or should be relied on that it is complete or correct or will apply to any particular project. This will depend on the technical and commercial circumstances. It is provided without liability and is subject to change without notice. Reproduction, use or disclosure to third parties, without express written authority, is strictly prohibited.

ALSTOM

www.alstom.com

ALSTOM