Geothermal Power – In Brief

NZAPWS Presentation

Boulder, CO, USA

2012

Simon Addison – Mighty River Power
Ian Richardson – Might River Power
David Addison – Thermal Chemistry Limited

Presented By: **David Addison** – Thermal Chemistry Limited
david.addison@thermalchemistry.com
Phone: +64 21 843 762

Disclaimer

This presentation has been made with the support of:

MIGHTY RIVER POWER

Presentation material in here does not necessarily reflect the opinion of Mighty River Power Ltd

Geothermal – what is it?

Enhanced Geothermal System (EGS)

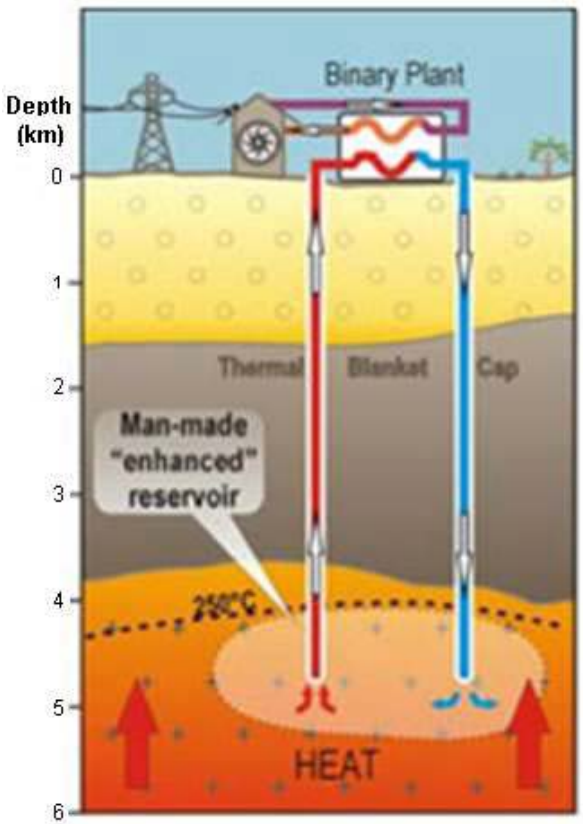

- Technologically challenging
- Represents 0% global installed capacity
- Significant long-term potential

Hot Sedimentary Aquifer (HSA)

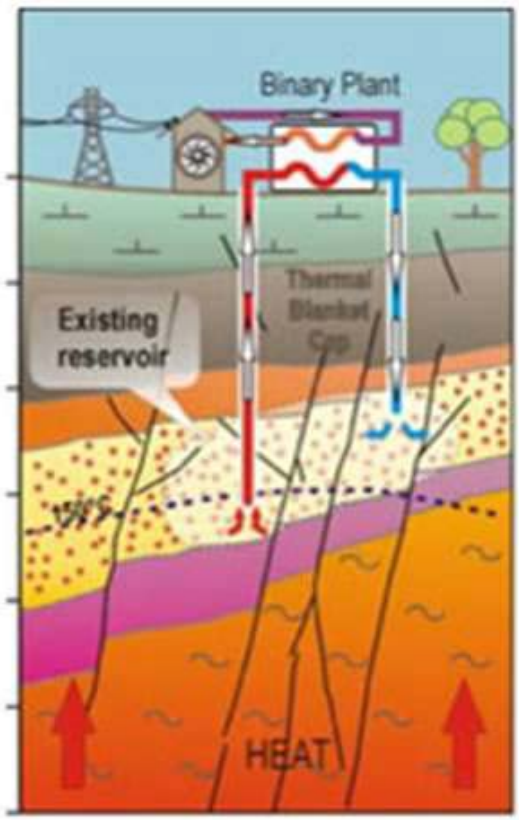

- Utilises conventional technologies
- Represents 4% global installed capacity

Volcanic Geothermal

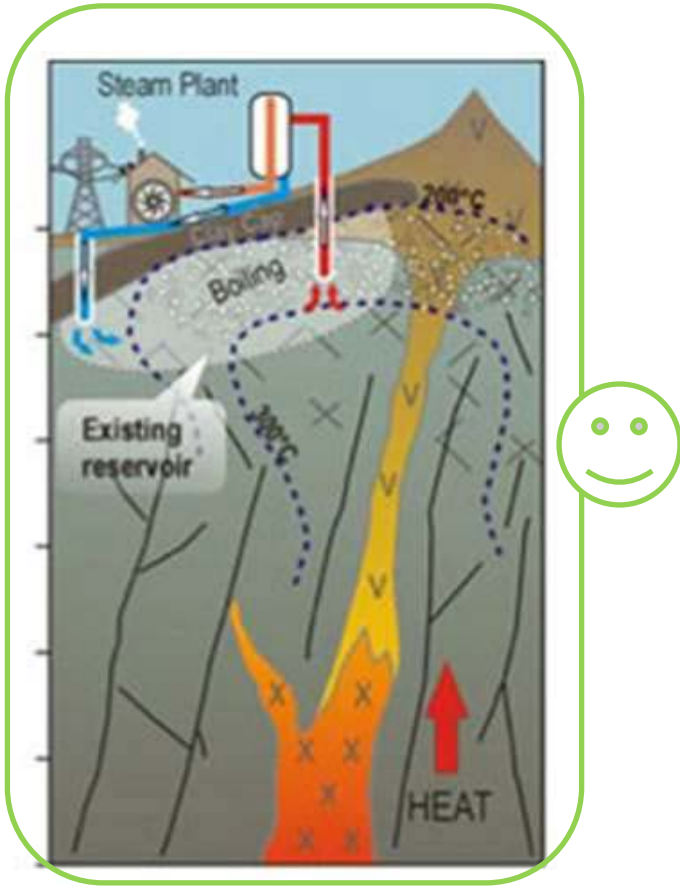

- Utilises conventional technologies
- Represents 96% global installed capacity

Geothermal Power - Worldwide

Mainly located on tectonic plate boundaries

Generation currently focussed heavily on Pacific "Ring of Fire"

Large growth experienced – renewable generation

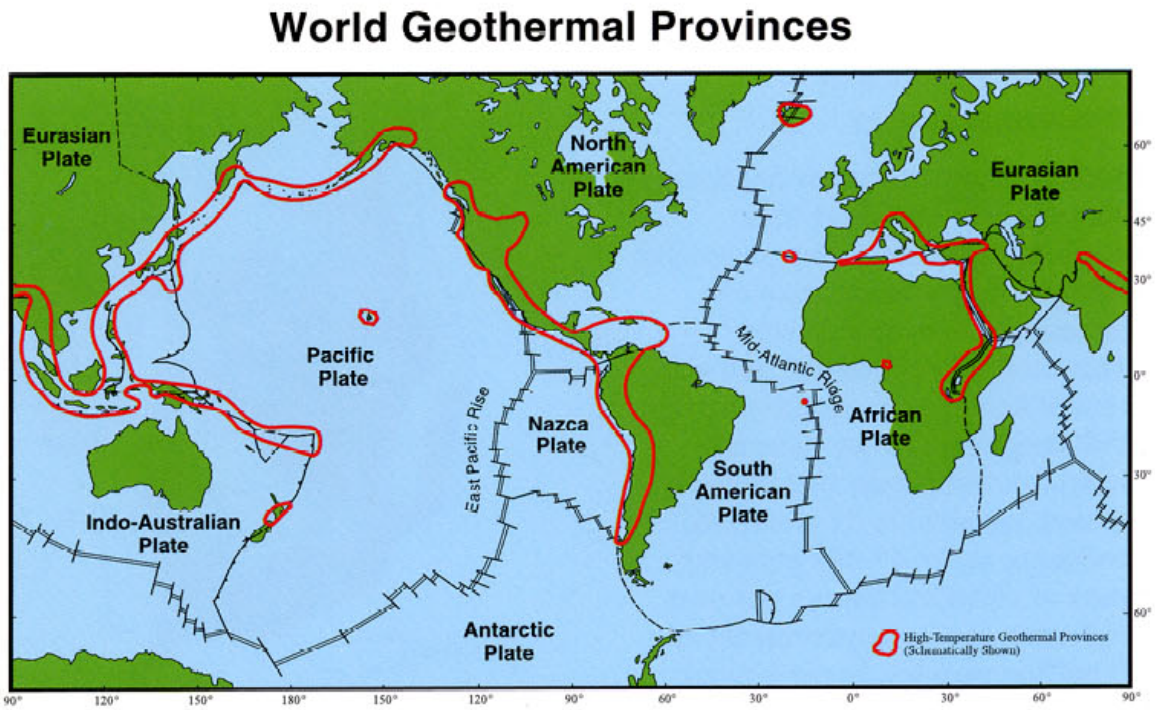

Source: Geothermal Resources Council

Geothermal Power - Worldwide

Competitive market

Knowledge and experience provides competitive advantage – limiting sharing of IP

No common source of standards across Geothermal Industry

Geothermal Power - NZ

Now about 16% of NZ electricity generation

Strong history – one field producing for over 50 years and currently building new plant

Established industry - Geothermal Institute etc.

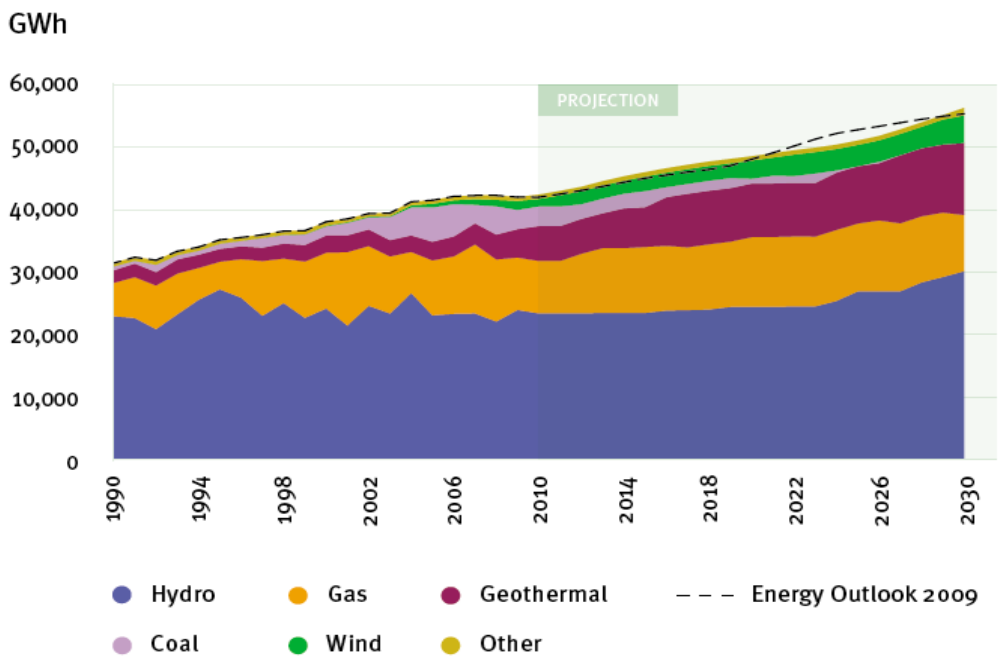

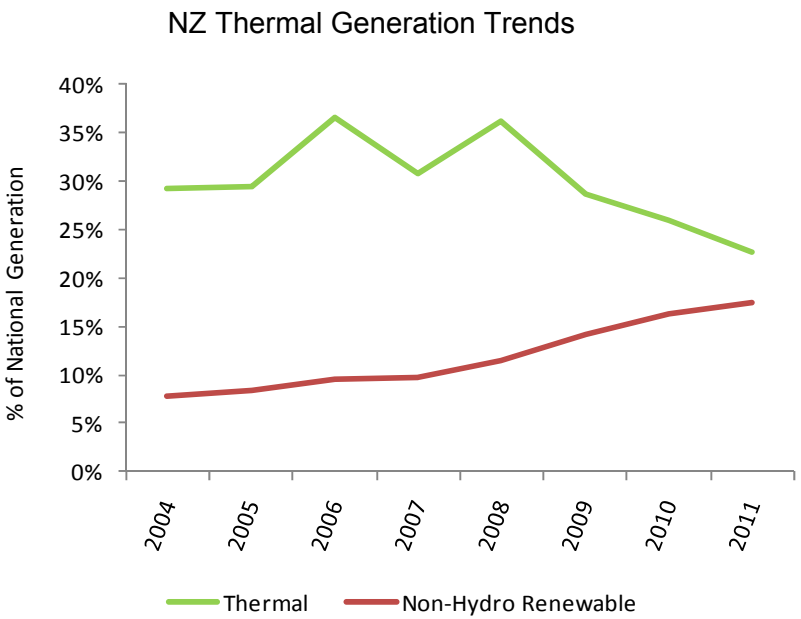

Source: Mighty River Power

Geothermal Power - NZ

Geothermal in NZ focussed in North Island

Within North Island, focussed in Taupo Volcanic Zone

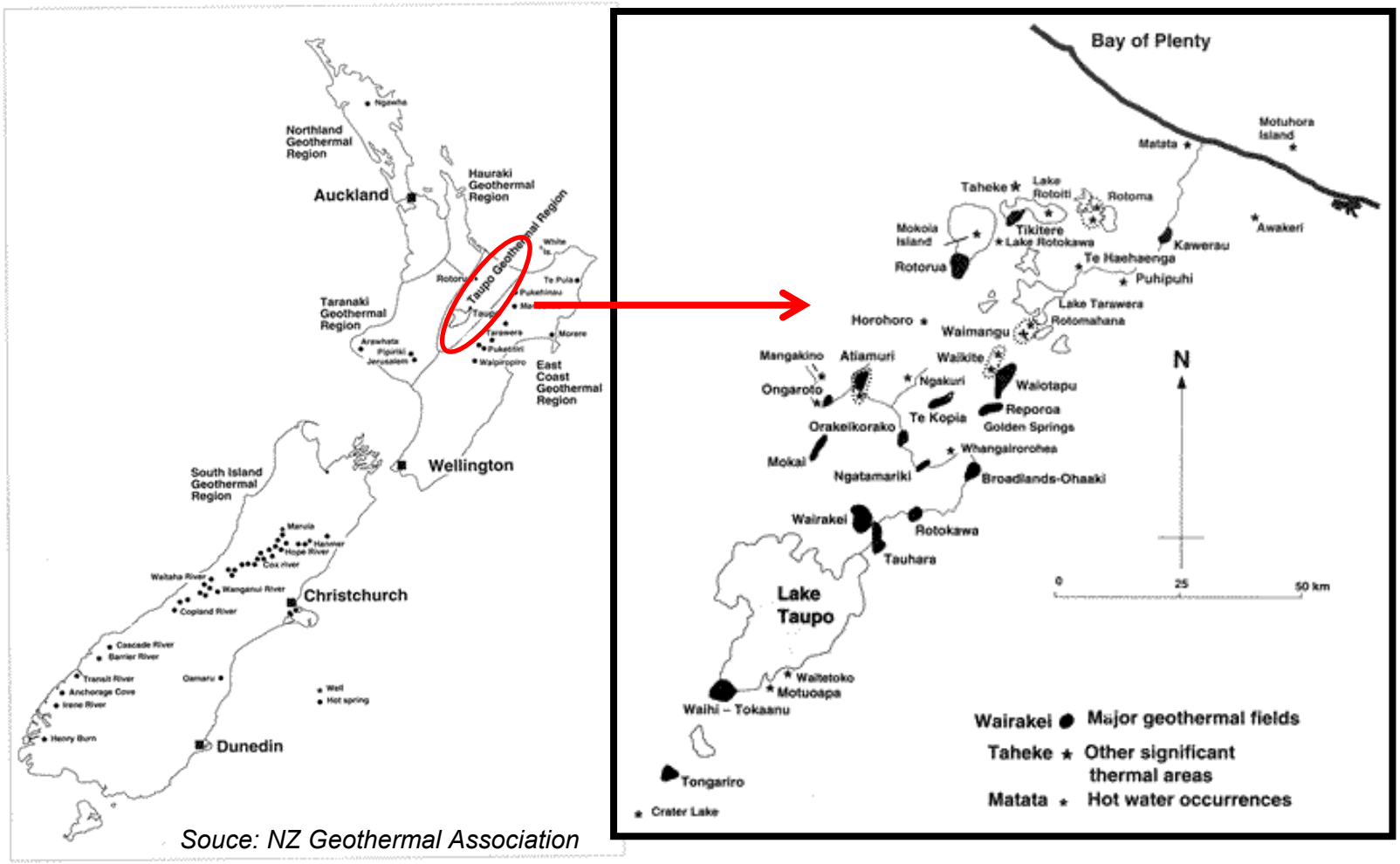

Souce: NZ Geothermal Association

What is Geothermal?

Hot water rises due to buoyancy

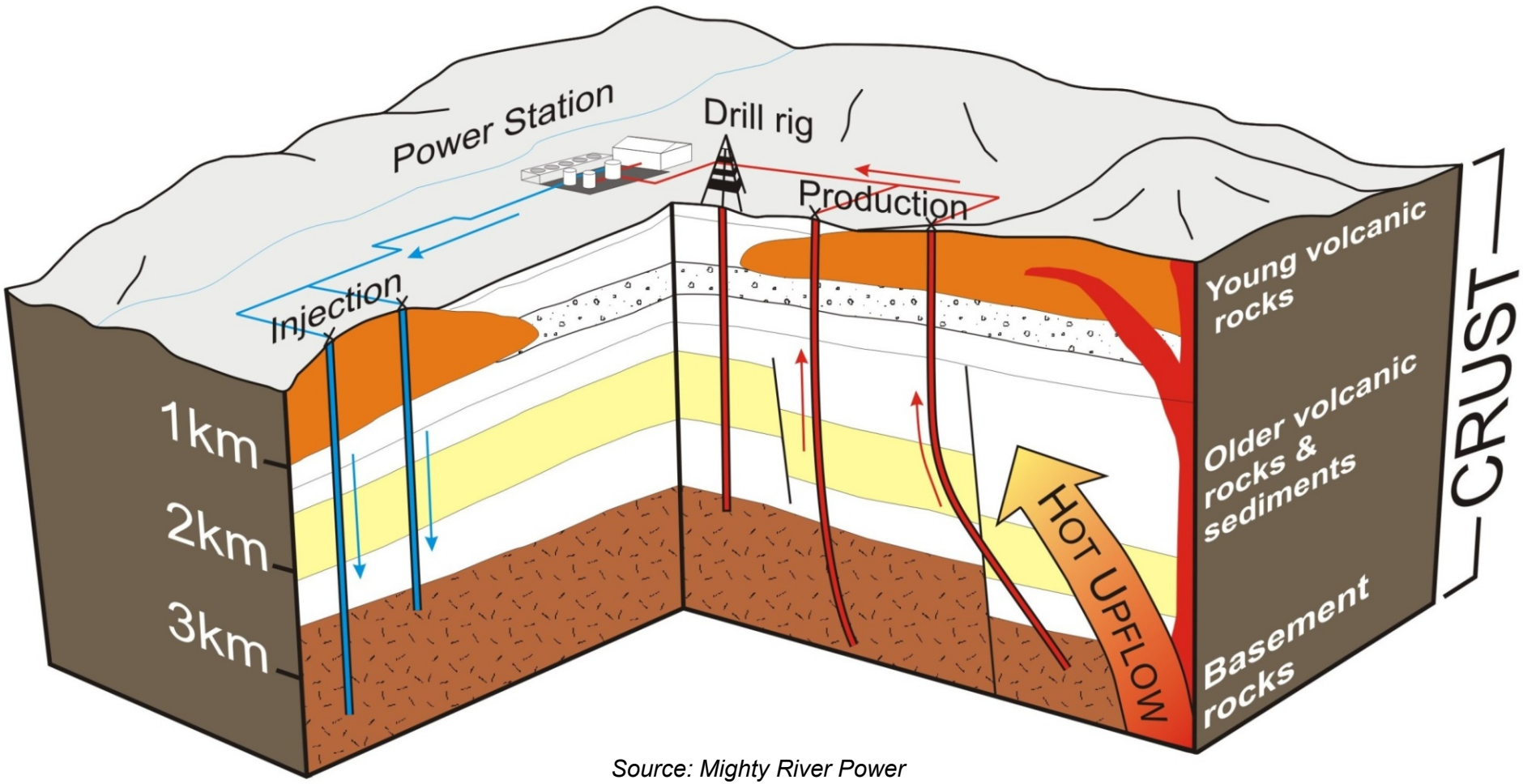

Source: Mighty River Power

What is Geothermal?

Requires high temperature and high permeability in reservoir rocks

High temperature systems found in areas with volcanic activity

Fluids normally at equilibrium with rock

- Very important especially for Silica

Relatively green

- Low GHG, low polluting, sustainable
- Reliable base load power with proven technology

What is Geothermal?

Multi-discipline approach:

- Geology
- Geochemistry
- Geophysics
- Reservoir Engineering

Reservoir

Wells

- Drillers

- Engineering Disciplines for Plant: Chemical, Mechanical, Electrical, Civil, Process

Plant

Plant Types - Flash

Steam is flashed off, sometimes in multi-stages from geothermal fluid

Steam used to drive a steam turbine, typically with a direct-contact condenser

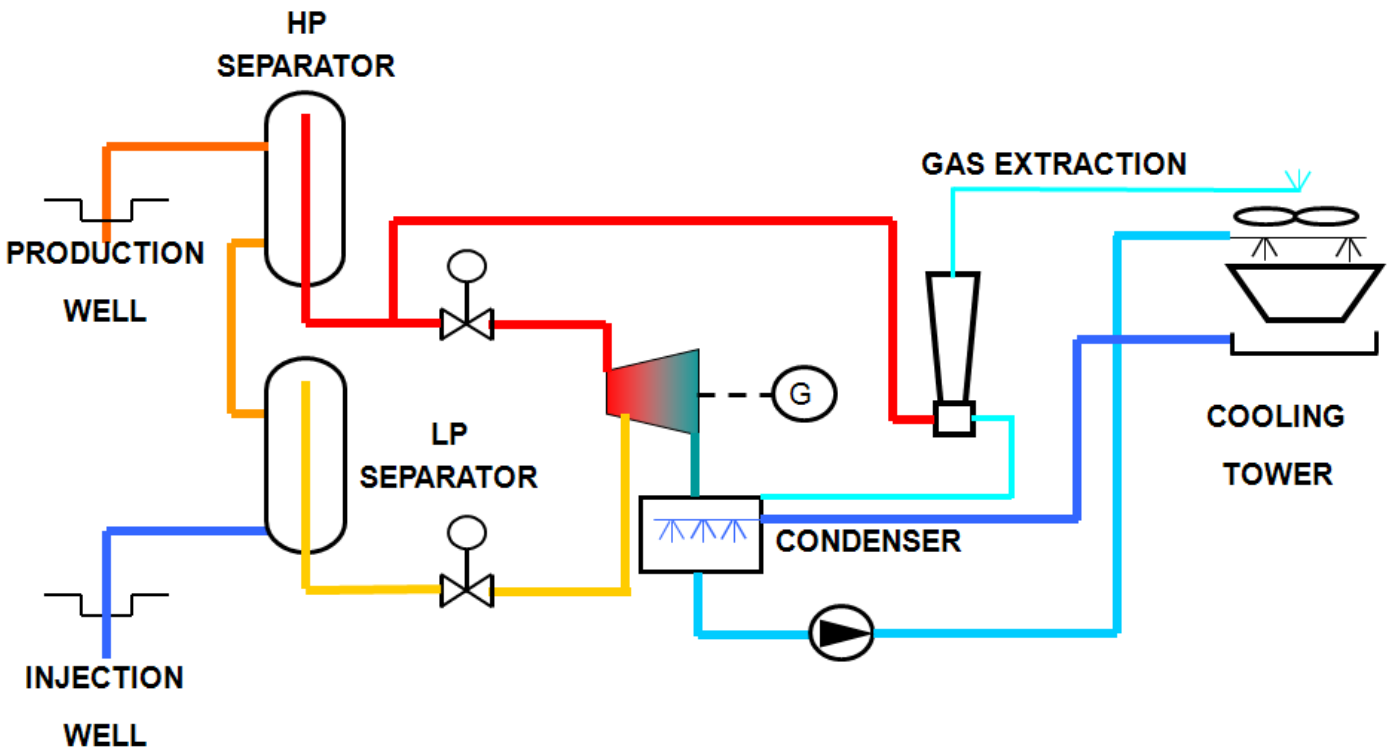

Nga Awa Purua -Rotokawa

Plant Types - Binary

Utilise geothermal fluid used to heat and vaporise an organic fluid to drive a turbine

Steam and brine are normally separated and then used in shell and tube heat exchangers

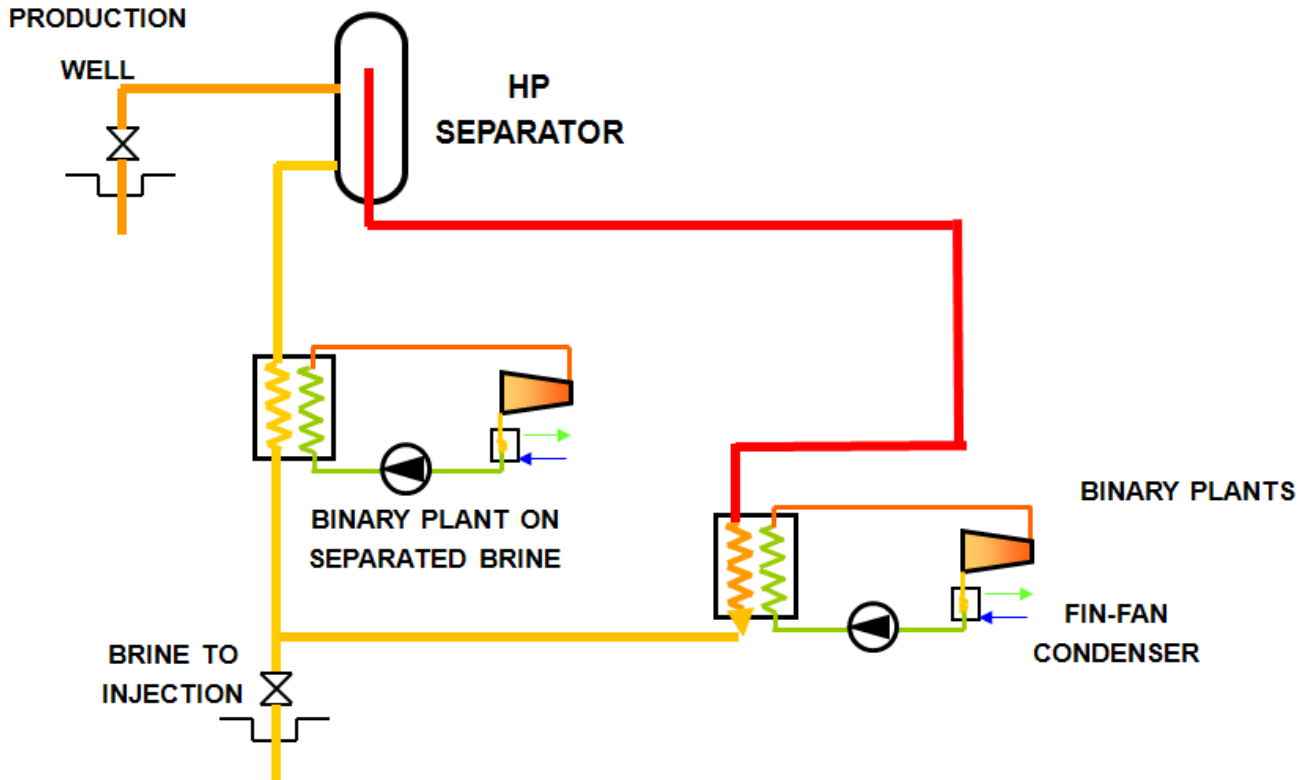

Plant Types – Combined Cycle

Similar to Binary Plants, however, use a back pressure steam turbine for steam

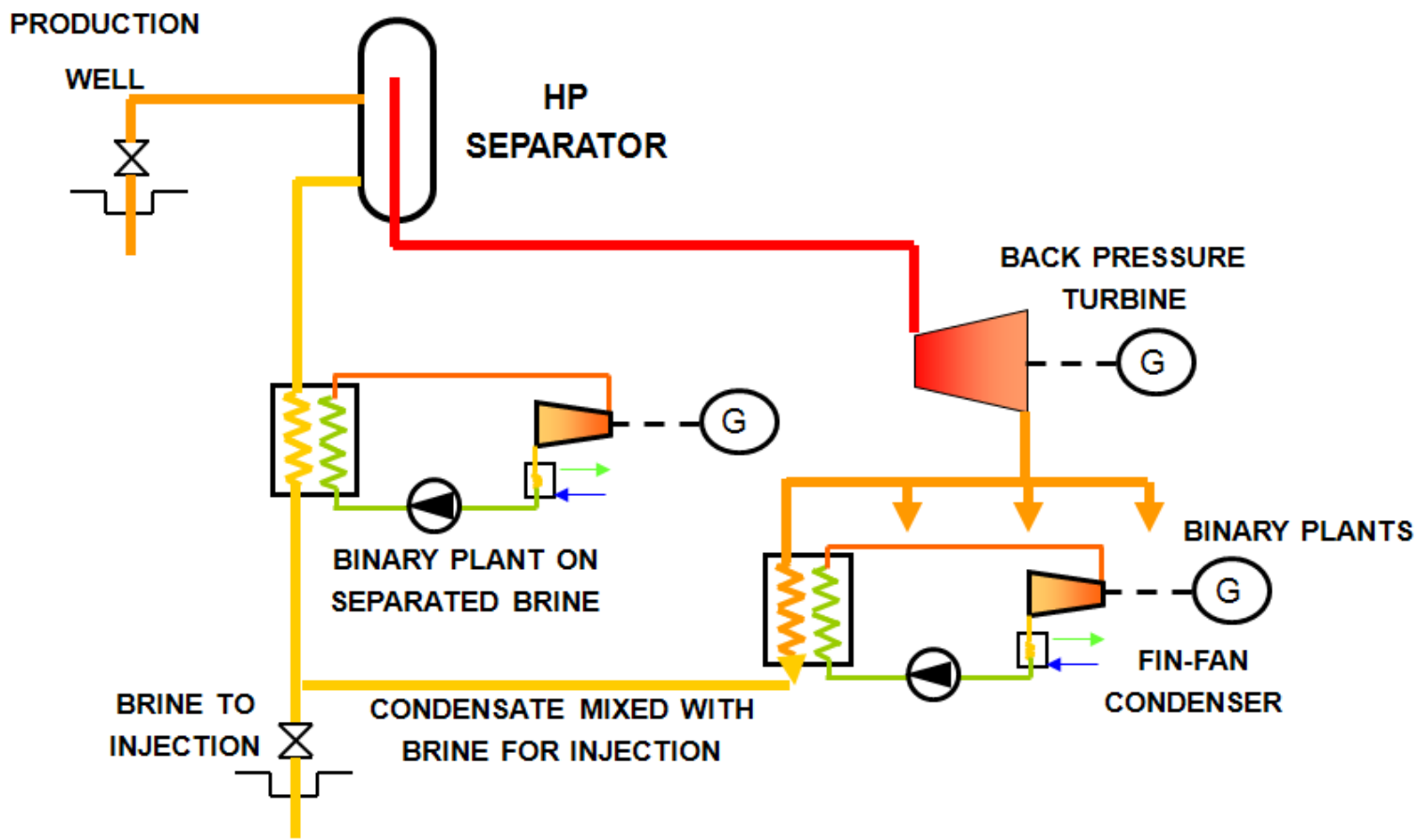

Mokai Power Plant

Direct Heat

Geothermal heat used for a number of industrial applications, such as timber and glasshouses

Chemistry in Geothermal

Almost all geothermal fields have different chemistry

Chemistry guides us to processes occurring underground, sources of fluids and temperatures

Extensive use of "geothermometers" to understand temperatures

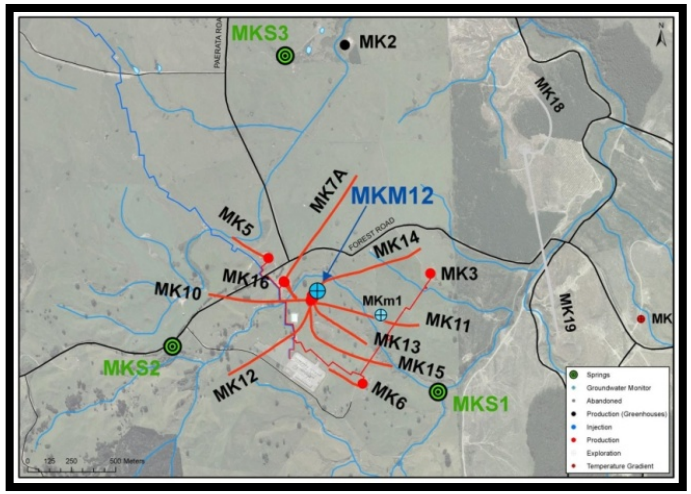

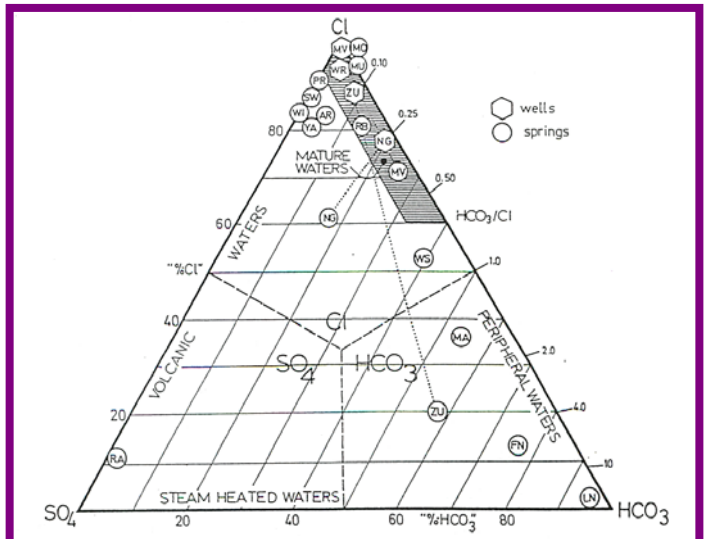

Figure 1 Relative Cl, SO_4 and HCO_3 contents of thermal waters on weight (mg/kg) basis.

Chemistry in Geothermal

Typical NZ reservoir fluids have 500-1000 ppm Chloride

Gas (0.5 - 5%) also produced due to magma degassing, mainly CO_2 but also some H_2S etc.

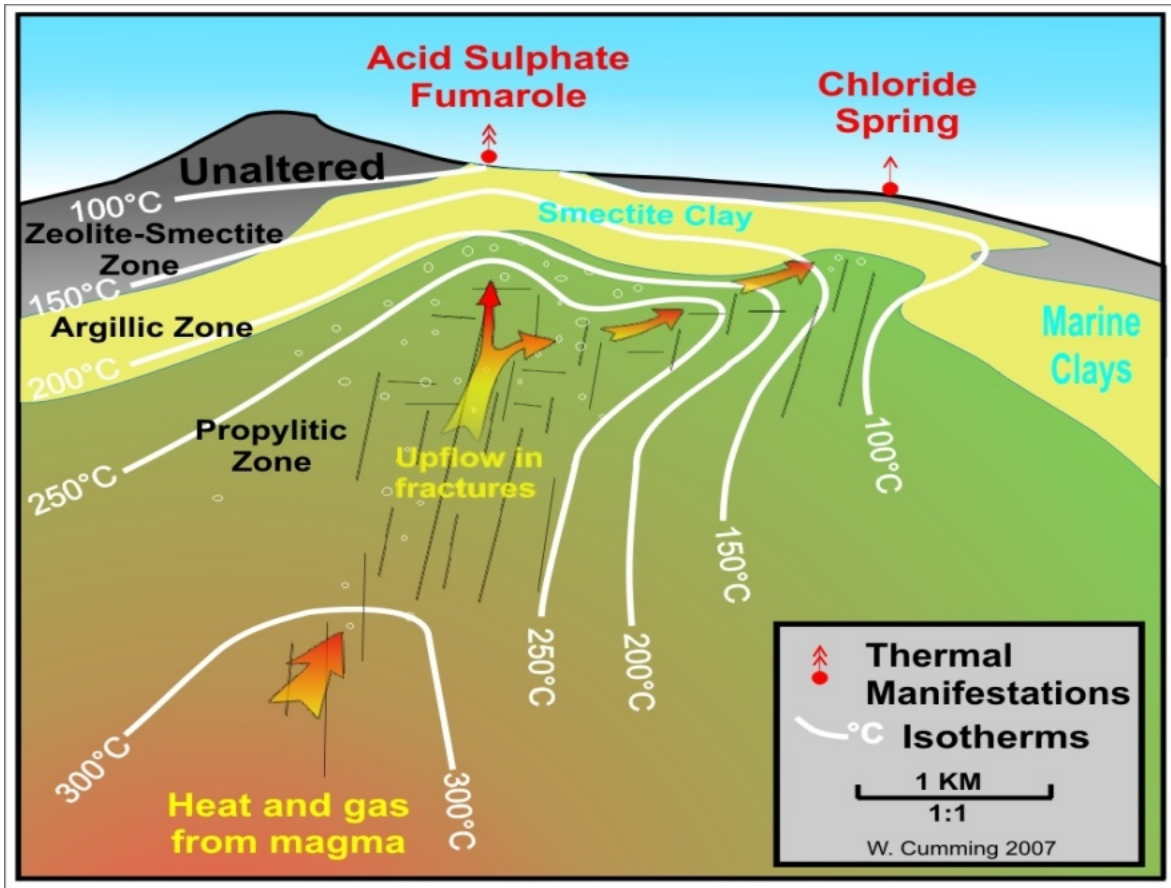

Geothermal reservoir developable at >250°C in fractures at >1000 m depth

Key Challenge – Silica Control

Silica limits how much energy can be used

New generation of plants control silica by pH modification to inhibit polymerisation (via acid)

Generates corrosion challenges e.g. acid dosing at high temperatures

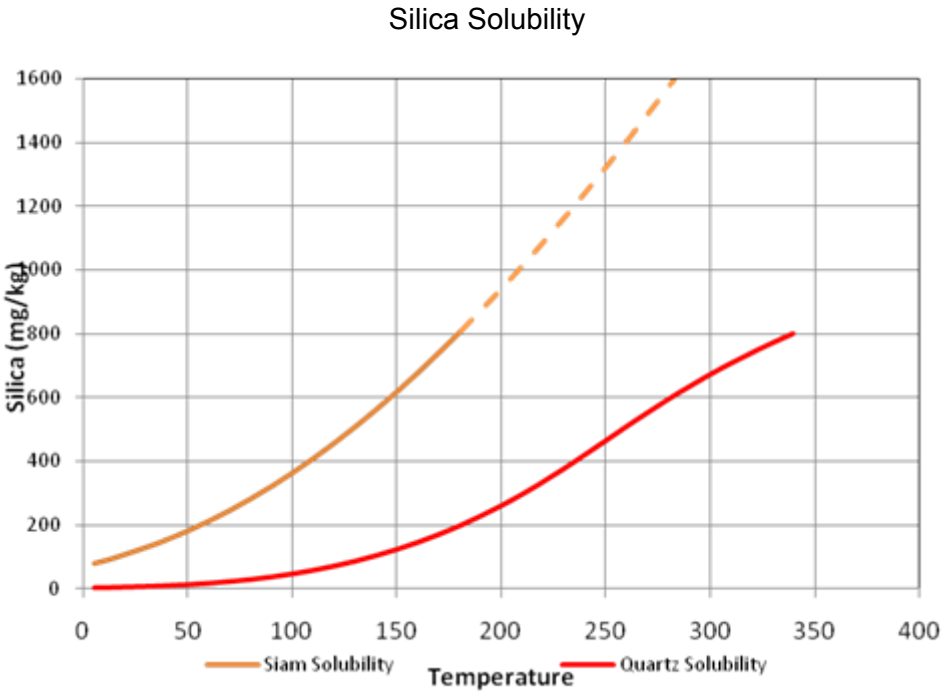

The Challenge for Geothermal

Corrosion vs. **Scale Mitigation**

Costs of getting scale mitigation wrong is seen to be higher than that of corrosion

- Mitigate scale as much as possible
- Alloy up in the right places

Steam Purity Challenges

Key items:

- Function of separator performance
- Difficult to sample, due to “wetness”
- Relatively low pressures
- Gassy samples, variable

… it’s pretty difficult to control your boiler

IAPWS items for Geothermal

Steam Tables – **critical** for Geothermal

Future potential areas of focus:

- Understanding geothermal corrosion mechanisms
- Understanding geothermal scaling mechanisms
- Developing geothermal steam purity guidelines
- Developing data on solubility's of geothemal species in high temperature environments

Geothermal Steam Turbine Issues

Geothermal steam turbines get a hard life

Ferrous sulphide deposits

Failures now being reported

Source: Might River Power

Silica deposits and scaling

Summary

- Geothermal is a growing industry – major part of the New Zealand power industry and Ring of Fire countries
- True base load renewable with small surface footprint
- Plants getting larger and more complicated – with corresponding chemistry problems
- IAPWS – natural fit, looking forward to involvement

Geothermal Power – In Brief

NZAPWS Presentation

Boulder, CO, USA

2012

Simon Addison – Mighty River Power
Ian Richardson – Might River Power
David Addison – Thermal Chemistry Limited

Presented By: **David Addison** – Thermal Chemistry Limited
david.addison@thermalchemistry.com
Phone: +64 21 843 762