New Zealand Association for the Properties of Water and Steam (NZAPWS)

NZAPWS – Areas of Key Interest - October 2012

New Zealand

4.3 million people

~5,000 MW's average demand

Agricultural based economy

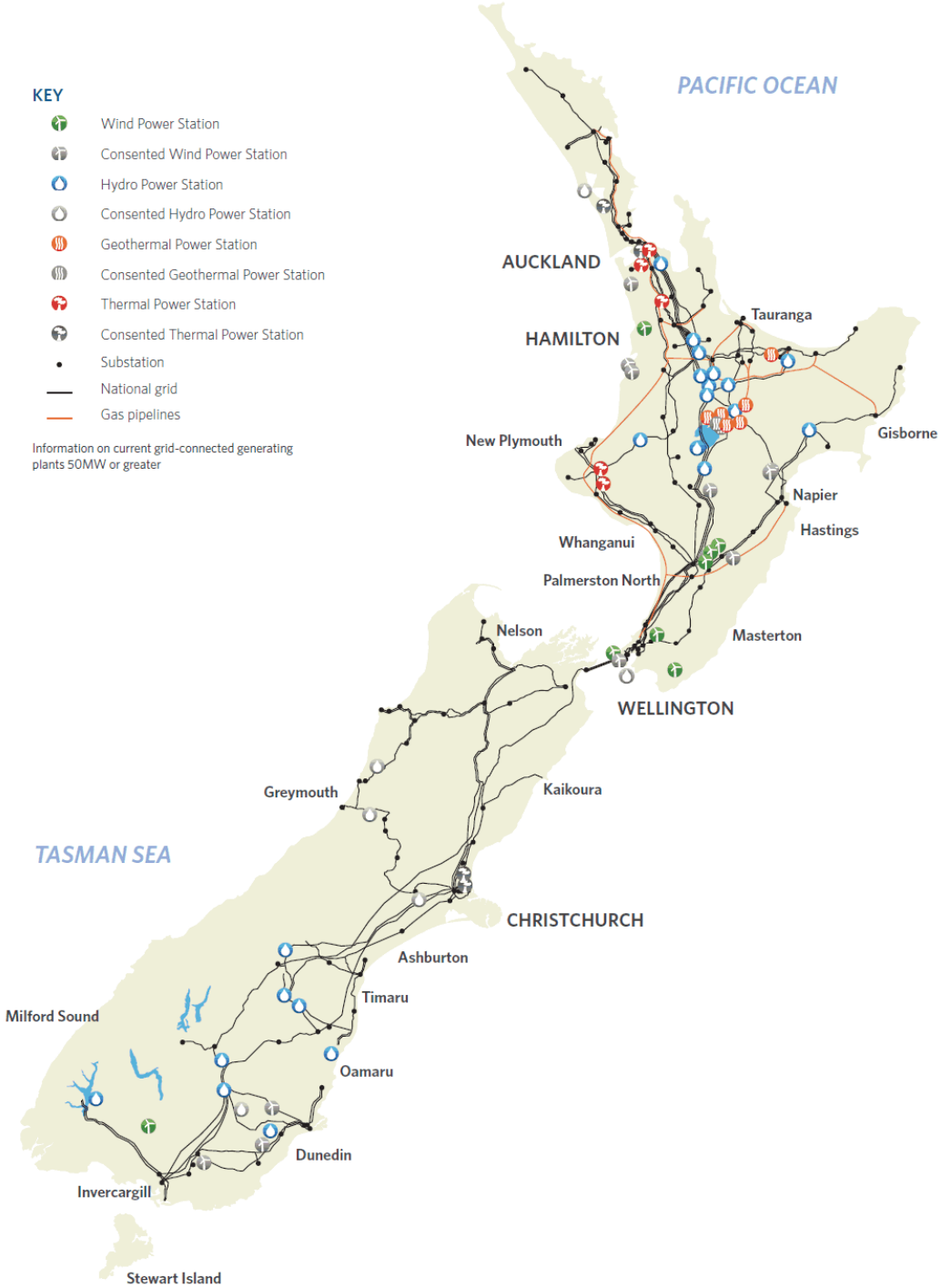

October 2012

Key Areas of Interest for NZAPWS - Geothermal

Direct Use - geothermal Steam Turbines – PTZ chemistry / Deposition / Corrosion

Silica Scaling on a Geothermal ST

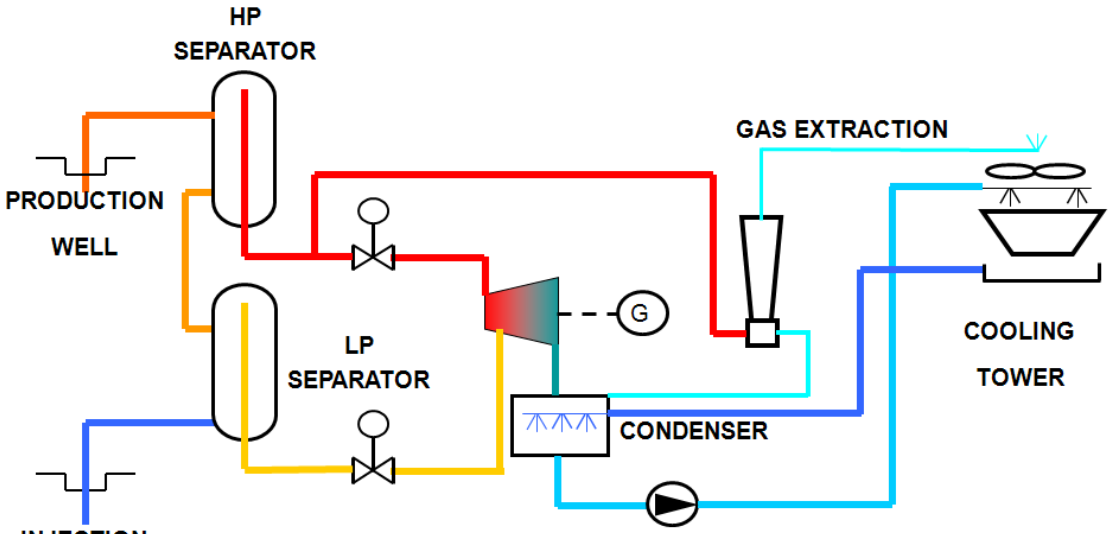

Multi Stage Flash Geothermal Plant

Source: Might River Power

Geothermal

Generation all located in the North Island

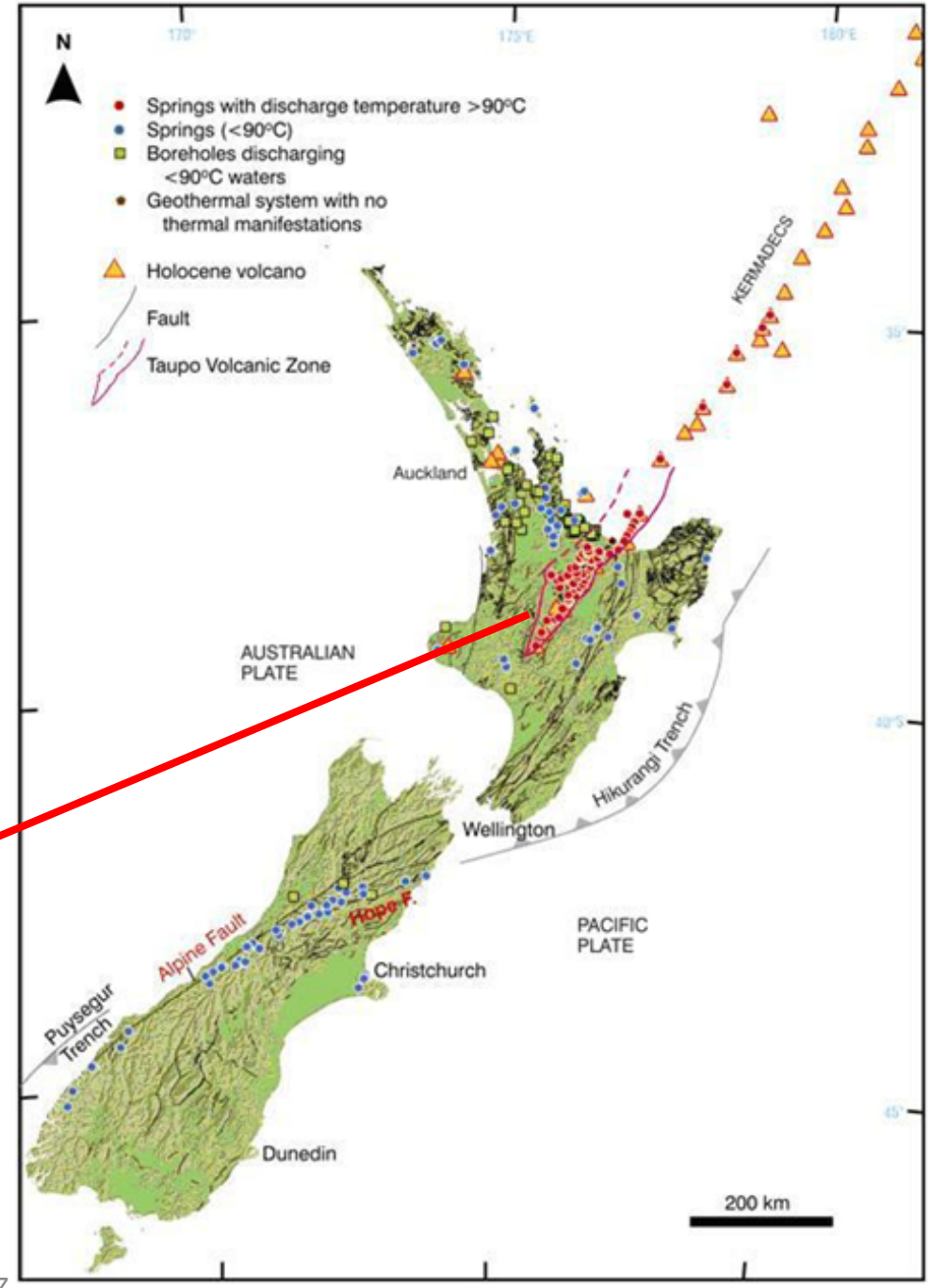

Low Temperature Geothermal Resources in New Zealand © A G Reyes, GNS Science

Key Areas of Interest for NZAPWS - Geothermal

Steam Tables – **critical** for Geothermal

Future potential areas of focus:

- Understanding geothermal corrosion mechanisms
- Understanding geothermal scaling mechanisms
- Developing geothermal steam purity guidelines
- Developing data on solubility's of geothemal species in high temperature environments

Nga Awa Purua -Rotokawa

Mokai Power Plant

Key Areas of Interest for NZAPWS – Milk Processing

Moisture removal from air/gases for milk drying applications

Dairy major industry industry and major energy user in NZ – 30% of global dairy product trade from NZ

Large co-generation plants (coal/gas turbines/HRSGs)

Source: Fonterra

30 T/hr milk drying plant

Key Areas of Interest for NZAPWS – Milk Processing

Dairy farming/value adding major industry for NZ – 2.8% of GDP from one industry

Water/steam of critical importance for improved efficiency's and corrosion/failures of plants

Key Areas of Interest for NZAPWS – Thermal Power

Number of CCGT plants in NZ and one large conventional plant

Good use of IAPWS documentation across all sites already (Thanks to Barry Dooley)

Standard thermal power plant corrosion/deposition issues

Key Areas of Interest for NZAPWS – Environmental

Large amount of environmental/atmospheric/fresh water/sea water research undertaken in New Zealand

Intention is to continue to try to get local researchers interested and involved in IAPWS

Key Areas of Interest for NZAPWS – Co-Generation

Large number of Co-generation plants in NZ

Thermal and geothermal based

Steam transformers in use – chemistry not really thought about

NTGA Clean Steam Plant – Dobbie Engineers, NZ

Steam Transformer/Reboiler

NTGA Clean Steam Plant – Dobbie Engineers, NZ

Provides a physical barrier between the main steam raising plant and the process

Steam Transformer/Reboiler Internals

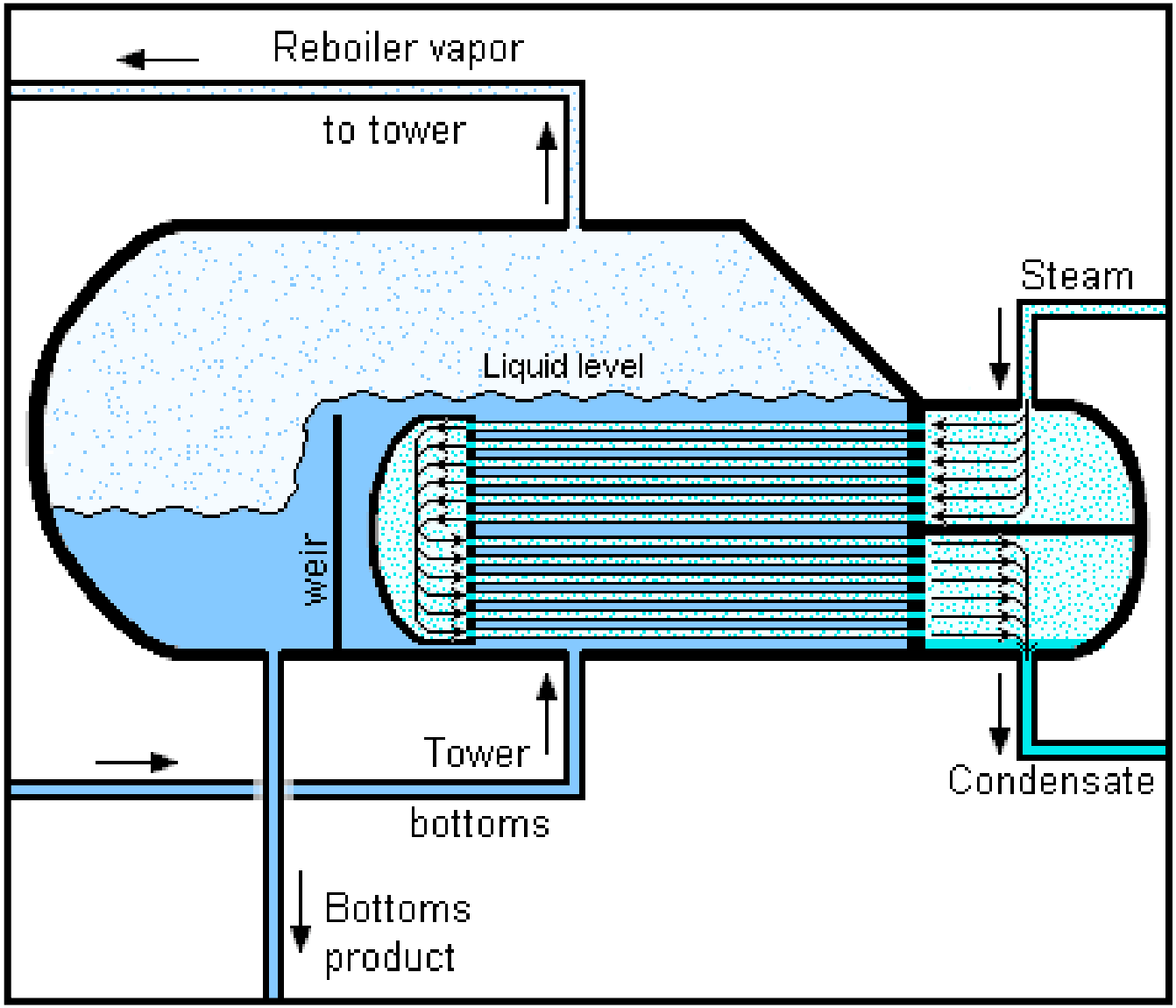

Steam Transformer/Reboiler Internals

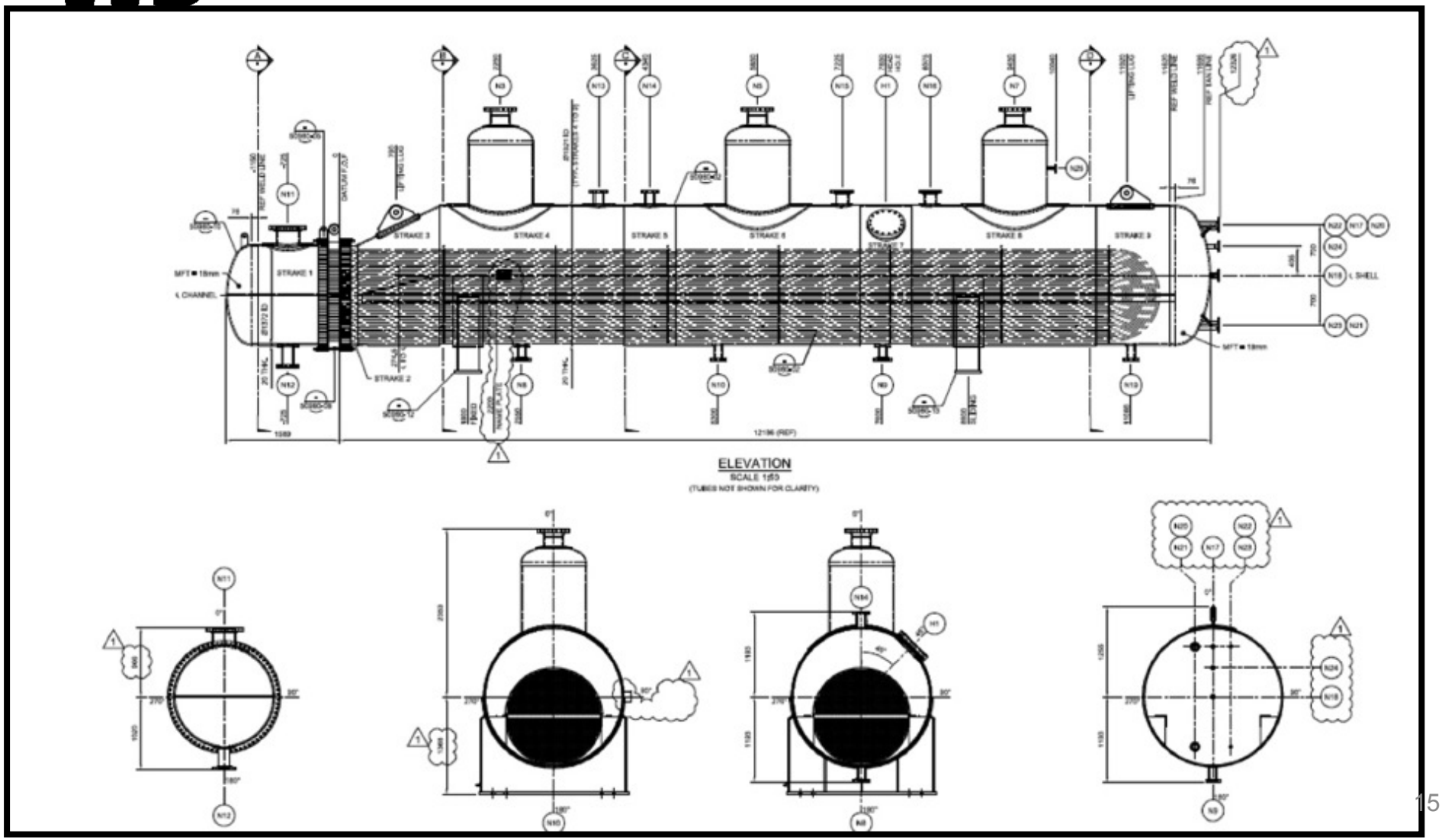

New Zealand Association for the Properties of Water and Steam (NZAPWS)

NZAPWS – Areas of Key Interest - October 2012